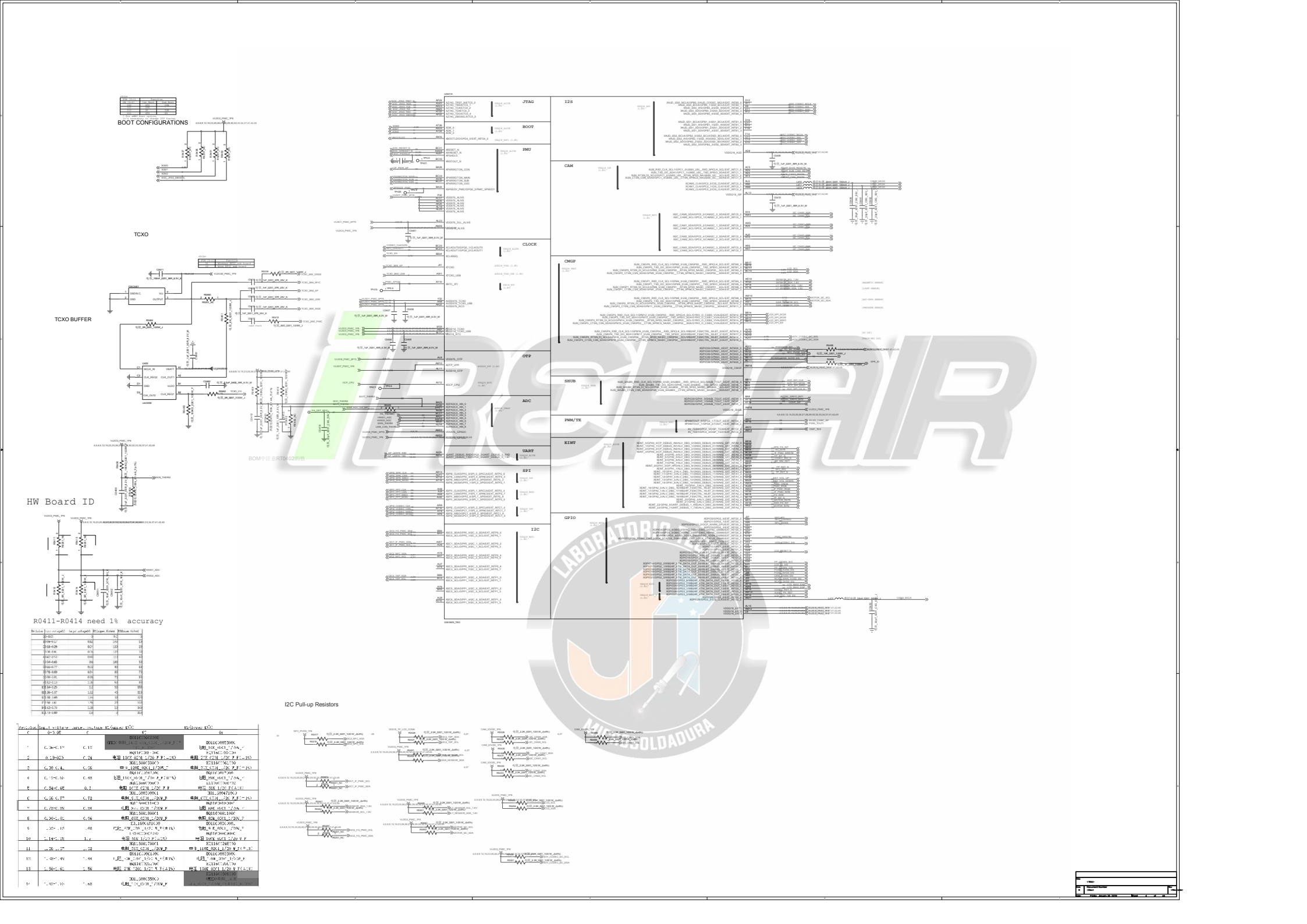
BOOT CONFIGURATIONS
TCXO
TCXO BUFFER
HW Board ID
R0411-R0414 need 1% accuracy
I2C Pull-up Resistors
JTAG
BOOT
PMU
CLOCK
OTP
ADC
UART
SPI
I2C
I2S
CAM
CMGP
SHUB
PWM/TE
EINT
GPIO

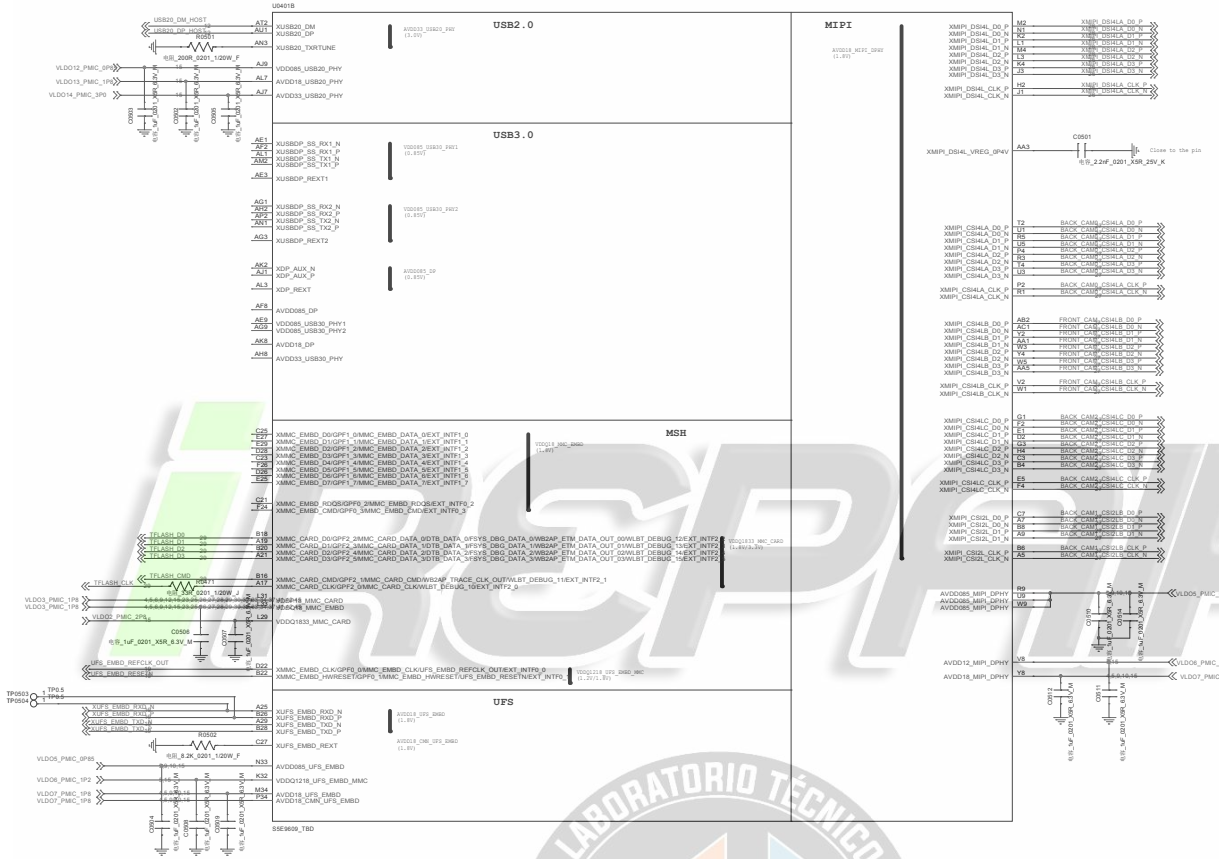

LABORATORIO TÉCNICO
MICROSOLDADURA

Title	<Title>		
Size D	Document Number <Doc>		Rev <RevCode>
Date: Friday, January 25, 2019	Sheet 5 of 44		

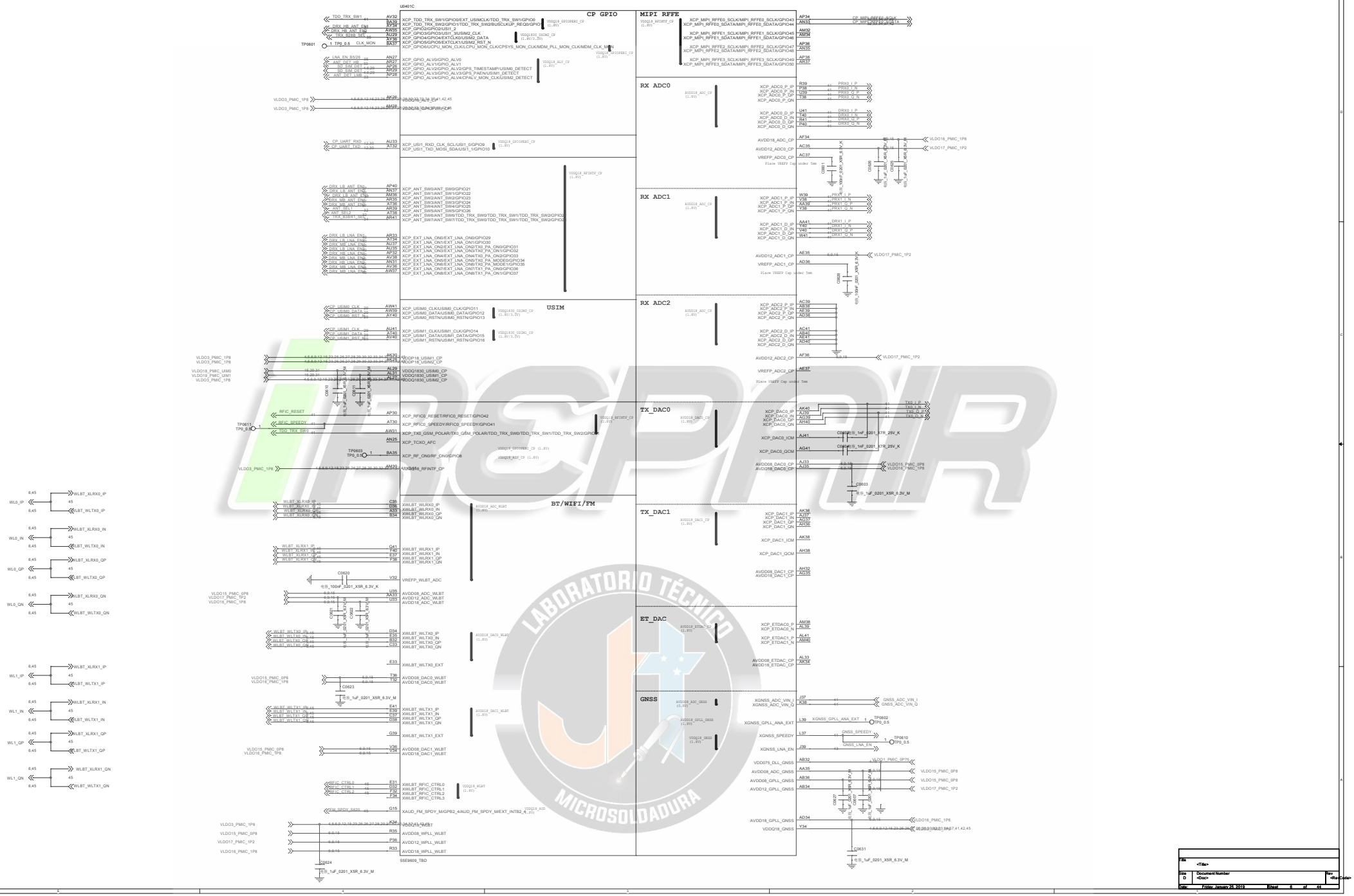

Title	<Title>
Size D	Document Number <Doc>
Rev	<RevCode>
Date: Friday, January 25, 2019	Sheet 6 of 44

iREPAIR
LABORATORIO TÉCNICO
MICROSOLDADURA

MSM8953
MIPI

Title	<Title>		
Size D	Document Number <Doc>		Rev <RevCode>
Date: Friday, January 25, 2019	Sheet 7 of 44		

iREPAIR
LABORATORIO TÉCNICO
MICROSOLDADURA

MSM8953
RF

Title	<Title>	
Size D	Document Number <Doc>	Rev <RevCode>
Date: Friday, January 25, 2019	Sheet 8 of 44	

All of DNP is 0201

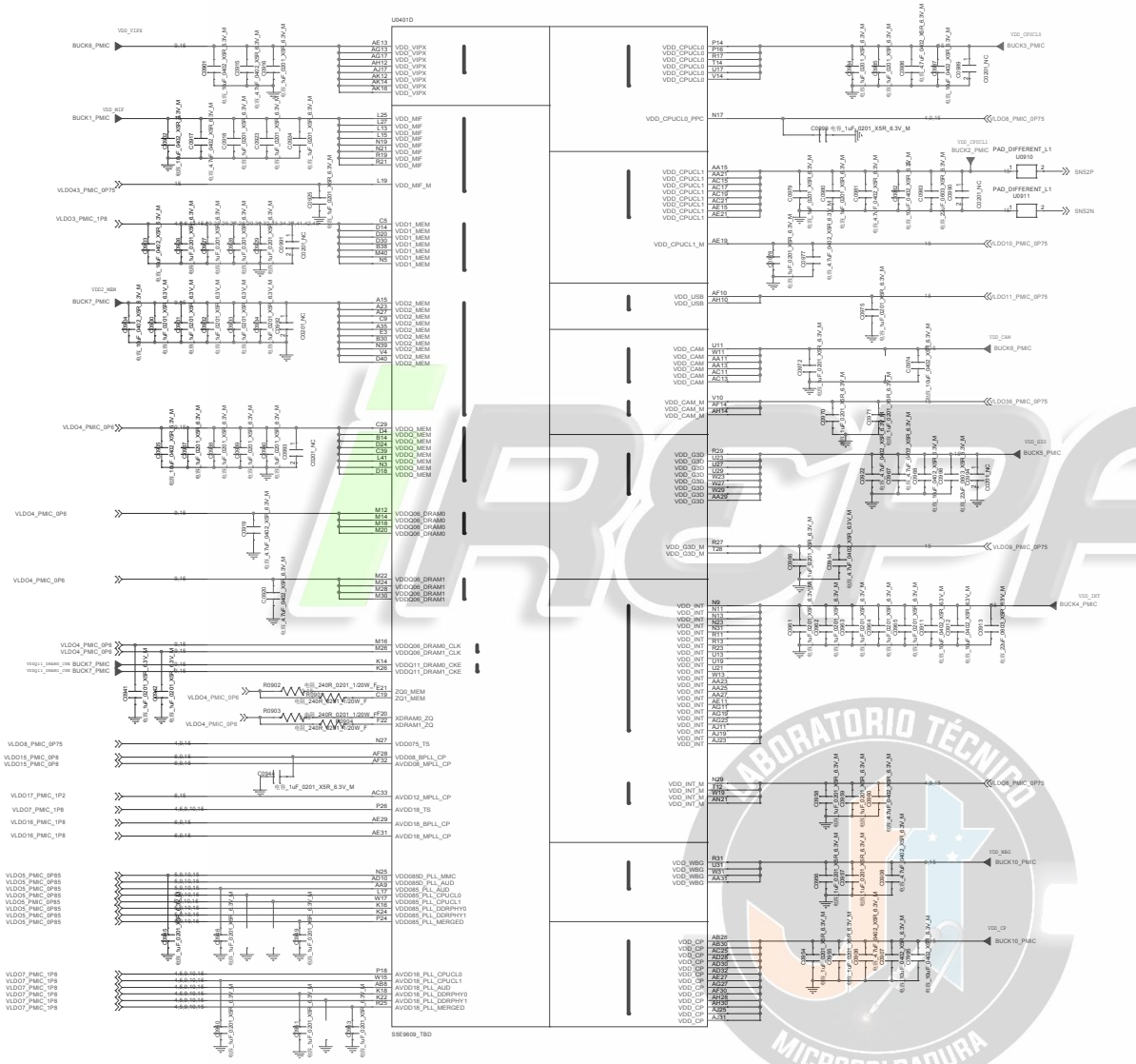

LABORATORIO TÉCNICO MICROSOLDADURA

Title	<Title>		
Size D	Document Number <Doc>		Rev <RevCode>
Date: Friday, January 25, 2019	Sheet 9 of 44		

System Power

V_SYSTEM
- V_SYS
- V_SYS_RF
- NFC_VBAT

BUCK Powers

- 0.75V/1500mA BUCK1_PMIC — VDD_MIF
- 0.75V/700mA BUCK2_PMIC — VDD_CPUCL1
- 0.75V/180mA BUCK3_PMIC — VDD_CPUCL0
- 0.75V/250mA BUCK4_PMIC — VDD_INT
- 0.75V/400mA BUCK5_PMIC — VDD_G3D
- 0.75V/400mA BUCK6_PMIC — VDD_CAM, VDD_VIPX
- 1.1V/1500mA BUCK7_PMIC — VDDQ2_MEM, VDDQ11_DRAM0_CKE, VDDQ11_DRAM1_CKE
- 1.3V/3000mA BUCK8_PMIC — BUCK8_PMIC_LDO
- 2.0V/2000mA BUCK9_PMIC — BUCK9_PMIC_LDO
- 0.75V/3000mA BUCK10_PMIC — VDD_CP, VDD_WBG

- 0.75V/300mA VLDO1_PMIC — VDD075_ALIVE, VDD075_TCXO, VDD075_RCO, VDD075_TCXO_USB, VDD075_DLL_ALIVE, VDD075_DLL_GNSS
- 2.8V/150mA VLDO2_PMIC — VDDQ1833_MMC_CARD
- 1.8V/450mA VLDO3_PMIC — VDD1_MEM, VDDQ18_EXT1, VDDQ18_EXT2, VDDQ18_EXT3, VDDQ18_SHUB, VDDQ18_AUD, VDDQ18_MMC_EMBD, VDD18_RTC, VDDQ18_ALIVE, AVDD18_GPADC, VDDP18_MMC_CARD, AVDD18_TCXO, AVDD18_TCXO_USB, VDDQ18_ISP, VDDQ18_CMGP, VDDQ18_GNSS, VDDQ18_WLBT, VDDQ18_RFINTF_CP, VDDQ18_GPIOPERI_CP, VDDP18_USIM1_CP, VDDP18_USIM2_CP, VDDQ18_ALV_CP, VDDQ1830_USIM2_CP, VDD_1P8_CP (RFIC), VDD18_IO_WLBT (WLBT), VDDQ18_I2C, VDDQ18_PERI_AP, VDD_MIC_1V8, VDD_1P8_CAM

- 0.67/600mA VLDO4_PMIC — VDDQ_MEM, VDDQ06_DRAM0, VDDQ06_DRAM1, VDDQ06_DRAM0_CLK, VDDQ06_DRAM1_CLK
- 0.85/300mA VLDO5_PMIC — VDD085_PLL_AUD, VDD085D_PLL_AUD, VDD085_PLL_CPUCL0, VDD085_PLL_CPUCL1, VDD085_PLL_DDRPHY0, VDD085_PLL_DDRPHY1, VDD085_PLL_MERGED, VDD085D_PLL_MMC, AVDD085_MIPI_DPHY, AVDD085_UFS_EMBD
  - VLDO5_PMIC_DP85 — 6.0-16 — C 0603 — 4.15_ONLY_0402_X5R_0.1V_M
- 1.2V/150mA VLDO6_PMIC — AVDD12_MIPI_DPHY, VDDQ1218_UFS_EMBD_MMC
- 1.8V/150mA VLDO7_PMIC — AVDD18_PLL_AUD, AVDD18_PLL_CPUCL0, AVDD18_PLL_CPUCL1, AVDD18_PLL_DDRPHY0, AVDD18_PLL_DDRPHY1, AVDD18_PLL_MERGED, AVDD18_OTP, AVDD18_MIPI_DPHY, AVDD18_CMN_UFS_EMBD, AVDD18_UFS_EMBD, AVDD18_TS
  - VLDO7_PMIC_1P8 — 4.5-15 — C 0402
- 0.75V/300mA VLDO8_PMIC — VDD_INT_M, VDD_CPUCL0_PPC, VDD075_GPADC, VDD075_TS, VDD075_OTP
- 0.75V/150mA VLDO9_PMIC — VDD_G3D_M
- 0.75V/150mA VLDO10_PMIC — VDD_CPUCL1_M
- 0.75V/300mA VLDO11_PMIC — VDD_USB
- 0.85V/300mA VLDO12_PMIC — VDD085_USB20
- 1.8V/150mA VLDO13_PMIC — AVDD18_USB20_PHY
- 3.0V/150mA VLDO14_PMIC — AVDD33_USB20_PHY
- 0.75V/150mA VLDO36_PMIC — VDD_CAM_M
- 0.75V/150mA VLDO43_PMIC — VDD_MIF_M

CP Power

- 0.8V/150mA VLDO15_PMIC — AVDD08_DAC0_CP, AVDD08_DAC1_CP, AVDD08_ETDAC_CP, AVDD08_MPLL_CP, VDD08_BPLL_CP, AVDD08_DAC0_WLBT, AVDD08_DAC1_WLBT, AVDD08_ADC_WLBT, AVDD08_WPLL_WLBT, AVDD08_ADC_GNSS, AVDD08_GPLL_GNSS
- 1.8V/150mA VLDO16_PMIC — AVDD18_ADC_CP, AVDD18_DAC0_CP, AVDD18_DAC1_CP, AVDD18_ETDAC_CP, AVDD18_MPLL_CP, AVDD18_BPLL_CP, AVDD18_ADC_WLBT, AVDD18_DAC0_WLBT, AVDD18_DAC1_WLBT, AVDD18_WPLL_WLBT, AVDD18_GPLL_GNSS
- 1.2V/150mA VLDO17_PMIC — AVDD12_ADC0_CP, AVDD12_ADC1_CP, AVDD12_ADC2_CP, AVDD12_MPLL_CP, AVDD12_ADC_WLBT, AVDD12_WPLL_WLBT, AVDD12_GPLL_GNSS
- 1.8V/2.85V/150mA VLDO18_PMIC — VDDQ1830_USIM0_CP
- 1.8V/2.85V/150mA VLDO19_PMIC — VDDQ1830_USIM1_CP

General Peripheral Power

- 1.8V/450mA VLDO33_PMIC — VDD_UFS_1P8
- 2.95V/800mA VLDO34_PMIC — VDD_UFS_2P95
- 3.3V/800mA VLDO35_PMIC — VDD_T_FLASH_3V0
- 3.3V/300mA VLDO37_PMIC — VDD_FPS_1P8
- 3.0V/300mA VLDO38_PMIC — REAR_CAM_AFVCC_2P8
- 1.8V/150mA VLDO39_PMIC — VDD18_LCD1
- 2.8V/150mA VLDO40_PMIC — VDD_SENSOR_2P8
- 3.0V/150mA VLDO41_PMIC — PM_CAM_FRT_AVDD_2P8
- 1.8V/300mA VLDO42_PMIC — VDD_CODEC_1P8
- 1.2V/300mA VLDO44_PMIC — PM_CAM_REAR_DVDD_1P2

RF & S620 POWER

- 1.8V/150mA VLDO20_PMIC — VDD18_TCXO, VRF18_GNSS (RFIC)
- 1.0V/300mA VLDO21_PMIC — DVDD10_RF (RFIC)
- 1.2V/300mA VLDO22_PMIC — VRF_TRX_1P2 (RFIC)
- 1.2V/450mA VLDO23_PMIC — VRF12_TRX_LO (RFIC)
- 1.8V/300mA VLDO24_PMIC — VRF18_TRX (RFIC)
- 2.8V/150mA VLDO25_PMIC — VRF28
- 1.1V/150mA VLDO26_PMIC — VRF11_GNSS (RFIC)
- 1.1V/450mA VLDO27_PMIC — AVDD11_BTFM (S620), AVDD11_RF
- 1.2V/150mA VLDO28_PMIC — AVDD12_LO (S620)
- 1.8V/150mA VLDO29_PMIC — AVDD18_ANA (S620)
- 1.8V/300mA VLDO30_PMIC — AVDD18_DA (S620)
- 3.3V/600mA VLDO31_PMIC — AVDD33_WL0 (S620)
- 3.3V/600mA VLDO32_PMIC — AVDD33_WL1 (S620)

LABORATORIO TÉCNICO MICROSOLDADURA

Title	<Title>	
Size D	Document Number <Doc>	Rev <RevCode>
Date: Friday, January 25, 2019	Sheet 10 of 44	

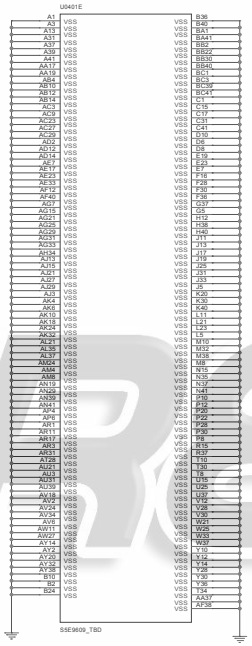

iRCPAIR
LABORATORIO TÉCNICO
MICROSOLDADURA

Title	<Title>		
Size D	Document Number <Doc>		Rev <RevCode>
Date: Friday, January 25, 2019	Sheet 11 of 44		

IF PMIC

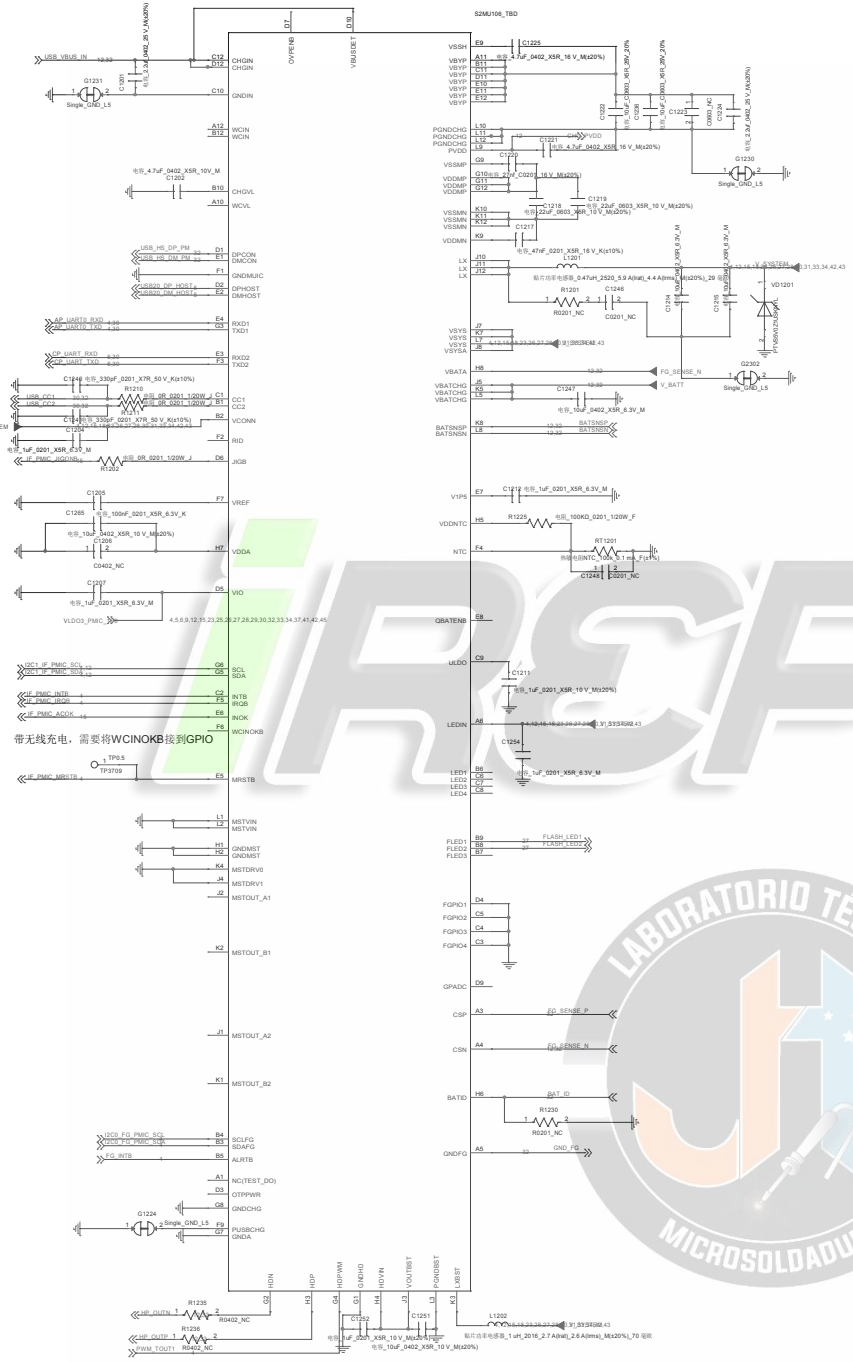

Slave Charge IC

C1228 need change to 4.7uF

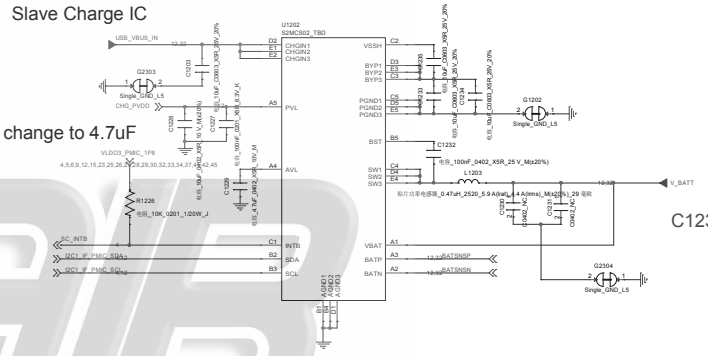

C1231---- NC

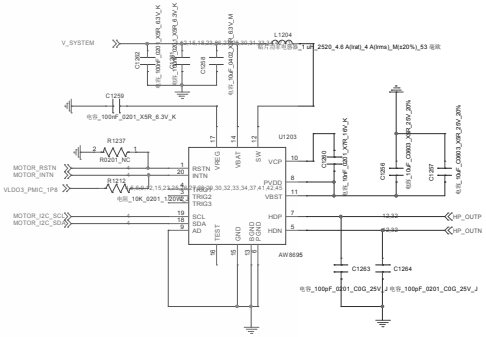

address of AW8695 is
AD:L OX5A H 0X5B

LABORATORIO TÉCNICO MICROSOLDADURA

Title	<Title>		
Size D	Document Number <Doc>		Rev <RevCode>
Date: Friday, January 25, 2019	Sheet 12 of 44		

iREPAIR

LABORATORIO TÉCNICO
MICROSOLDADURA

Title	<Title>	
Size D	Document Number <Doc>	Rev <RevCode>
Date: Friday, January 25, 2019	Sheet 13 of 44	

iREPAIR

LABORATORIO TÉCNICO
MICROSOLDADURA

Title	<Title>	
Size D	Document Number <Doc>	Rev <RevCode>
Date: Friday, January 25, 2019	Sheet 14 of 44	

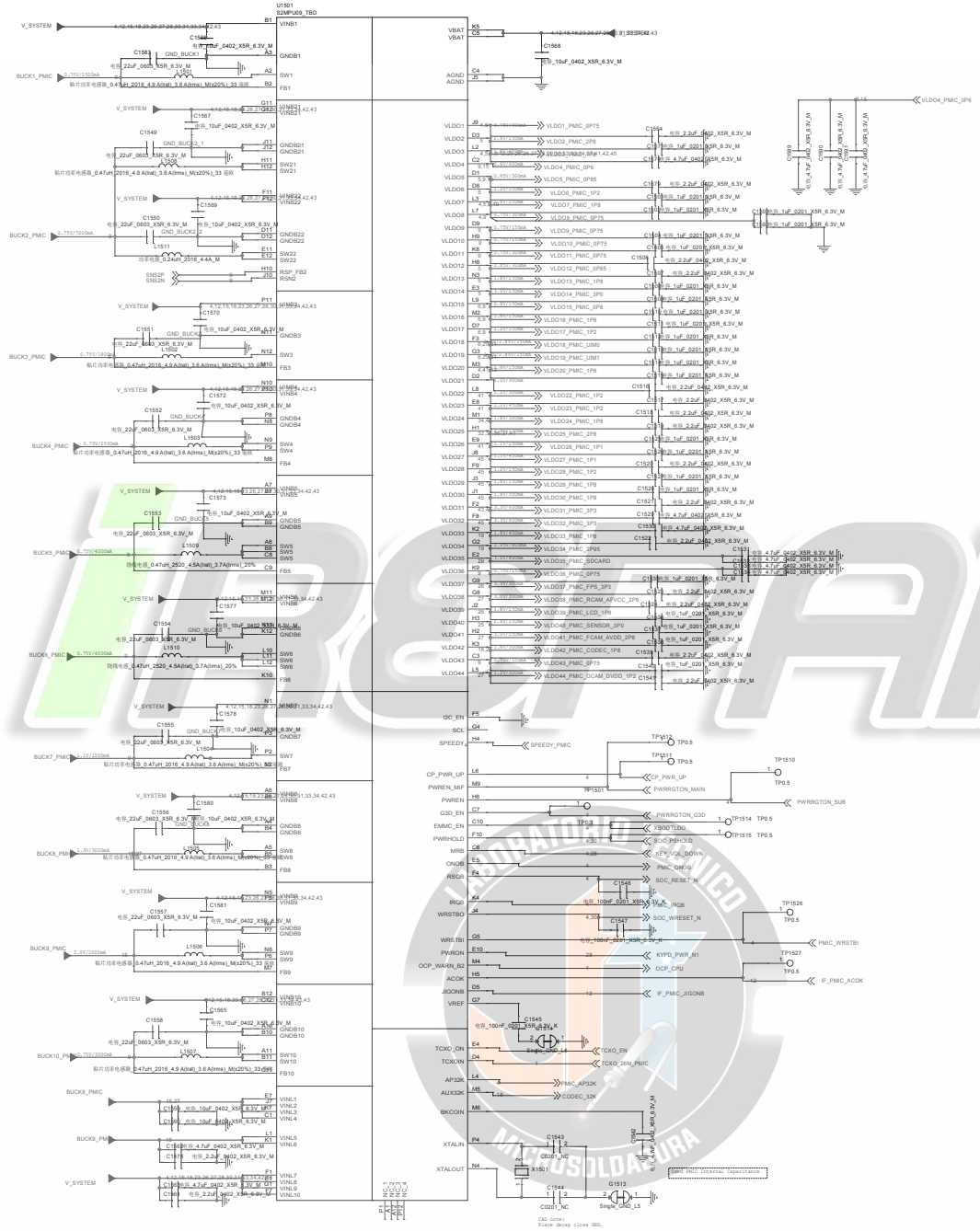

Title	QL1500_MB_V1.0
Size: D	Document Number: <Doc>
Rev: V1.0	
Date: Friday, January 25, 2019	Sheet 16 of 44

iREPAIR
LABORATORIO TÉCNICO
MICROSOLDADURA

Title <Title>		
Size A	Document Number <Doc>	Rev <RevCode>
Date: Friday, January 25, 2019	Sheet 16 of 44	

iREPAIR

LABORATORIO TÉCNICO
MICROSOLDADURA

Title	<Title>	
Size D	Document Number <Doc>	Rev <RevCode>
Date: Friday, January 25, 2019	Sheet 17 of 44	

EVB 与软件确认是否用这组I2C

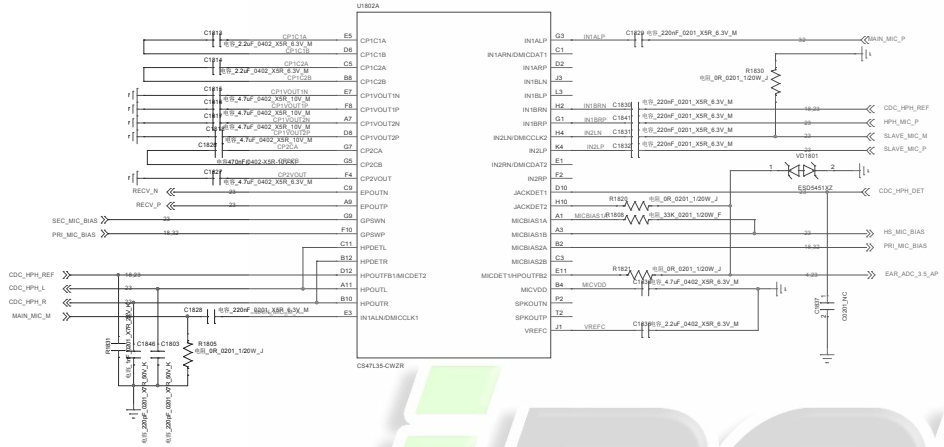

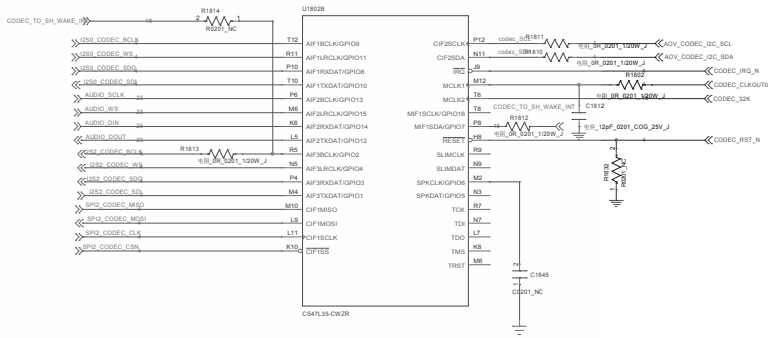

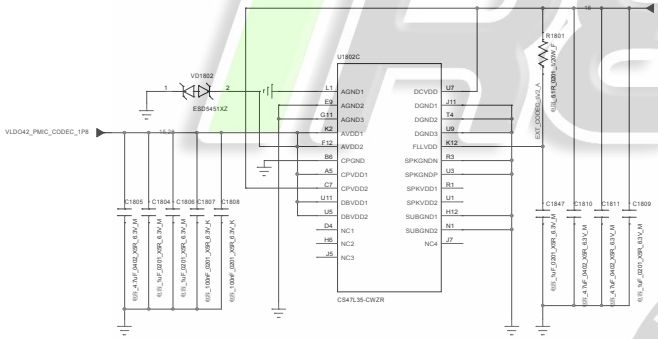

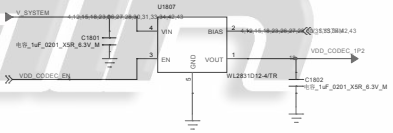

VDD_CODEC 1.2v

iREPAIR
LABORATORIO TÉCNICO
MICROSOLDADURA

Company: Huaqin		
Block Title	Test Points	
Project	Telfer	Rev 1.0
Date: Friday, January 25, 2019	Sheet 18 of 44	

UFS2.0

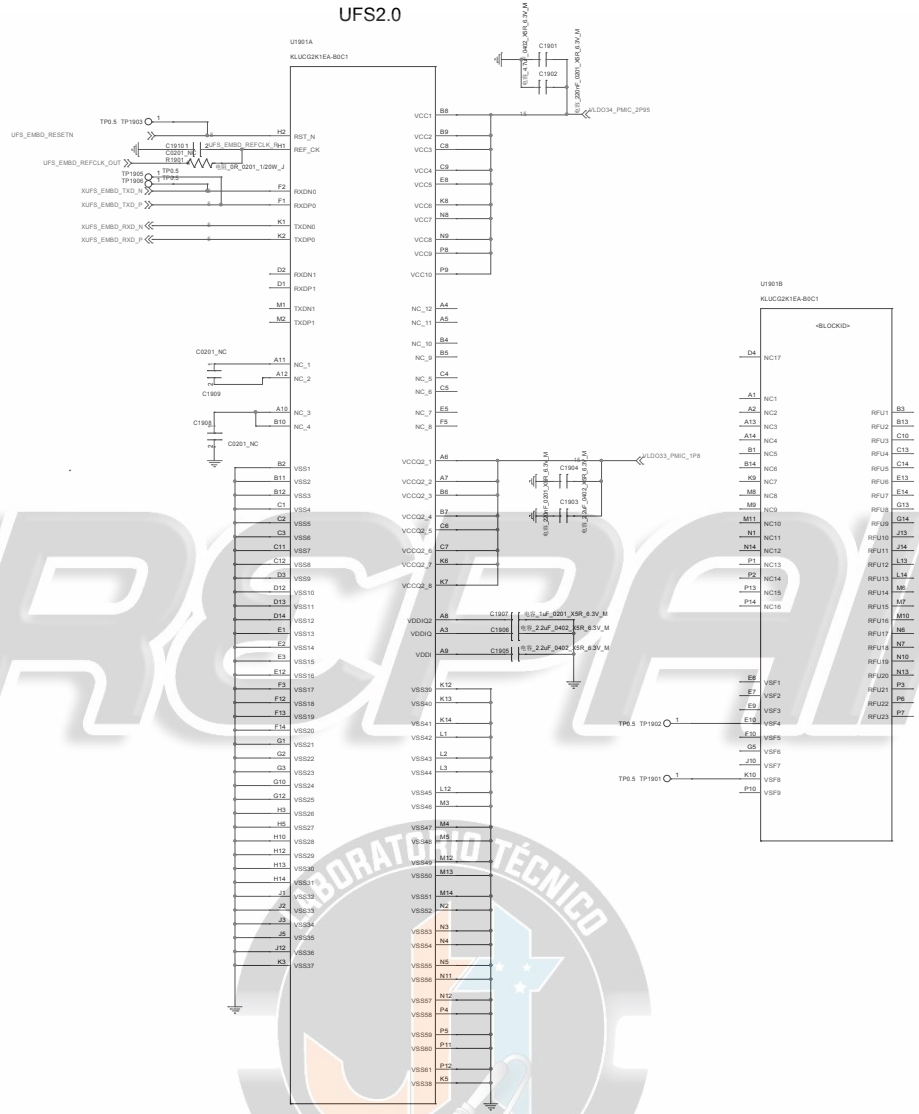

CAD Notes :

Place TP close to the via to minimize stub length.

iRCPAIR
LABORATORIO TÉCNICO
MICROSOLDADURA

Title	<Title>		
Size D	Document Number <Doc>		Rev <RevCode>
Date: Friday, January 25, 2019	Sheet 19 of 44		

CC Logic??

iREPAIR
LABORATORIO TÉCNICO
MICROSOLDADURA

Title	<Title>		
Size D	Document Number <Doc>		Rev <RevCode>
Date: Friday, January 25, 2019	Sheet 20 of 44		

iREPAIR

LABORATORIO TÉCNICO
MICROSOLDADURA

Title	<Title>	
Size D	Document Number <Doc>	Rev <RevCode>
Date: Friday, January 25, 2019	Sheet 21 of 44	

iREPAIR
LABORATORIO TÉCNICO
MICROSOLDADURA

Title <Title>		
Size A	Document Number <Doc>	Rev <RevCode>
Date: Friday, January 25, 2019	Sheet 22 of 44	

副MIC

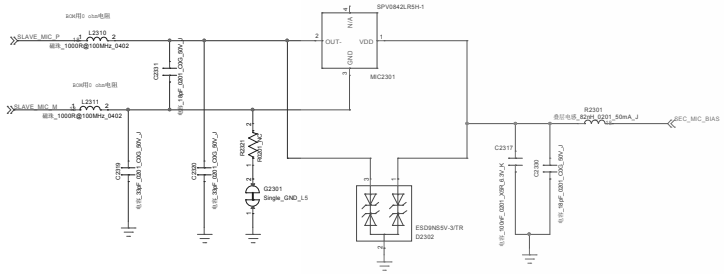

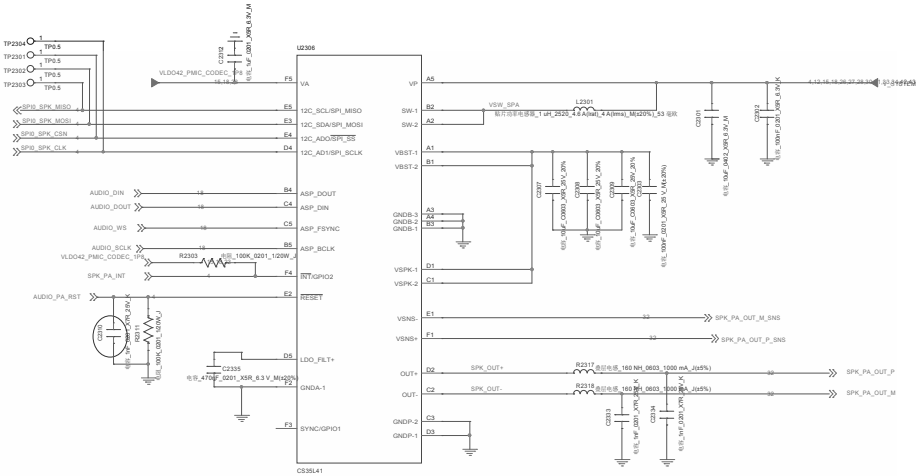

Receiver

AUDIO JACK

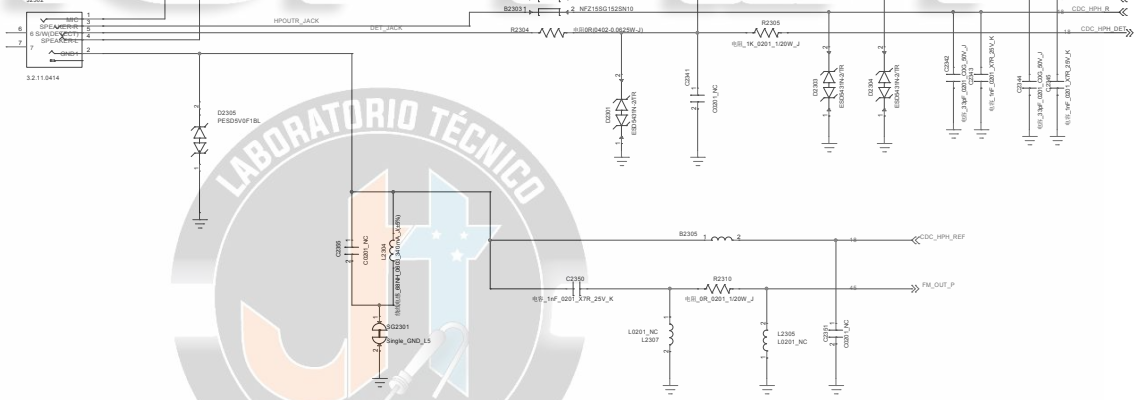

iREPAIR
LABORATORIO TÉCNICO
MICROSOLDADURA

Title	<Title>		
Size D	Document Number <Doc>		Rev <RevCode>
Date: Friday, January 25, 2019	Sheet 23 of 44		

iREPAIR

LABORATORIO TÉCNICO
MICROSOLDADURA

Title	<Title>	
Size D	Document Number <Doc>	Rev <RevCode>
Date: Friday, January 25, 2019	Sheet 24 of 44	

ACCELEROMETER+GYRO

I2C ADDRESS 0X68 0b1101000

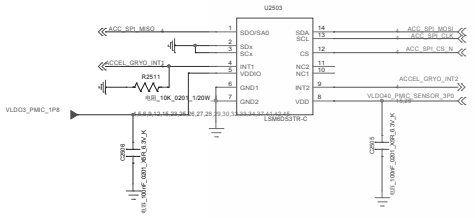

Sar sensor

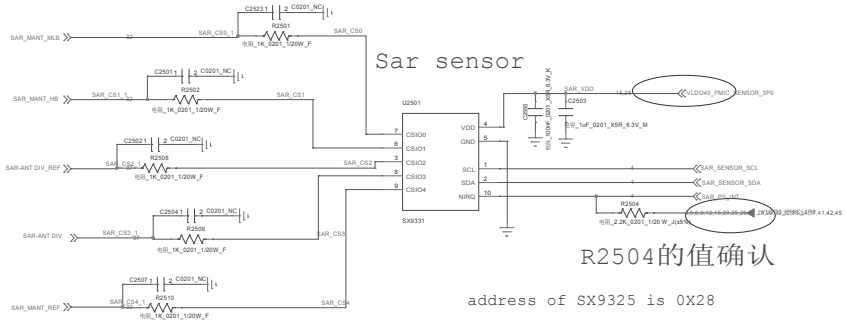

R2504的值确认

address of SX9325 is 0X28

Magnetic Sensor

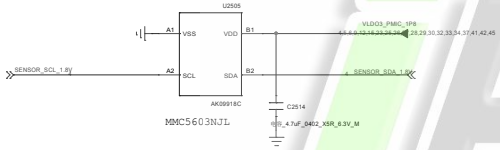

MMC5603NJL

address of AK09918 is 0X0C
MMC5603NJL is 0X30

ALS/P SENSOR CONN

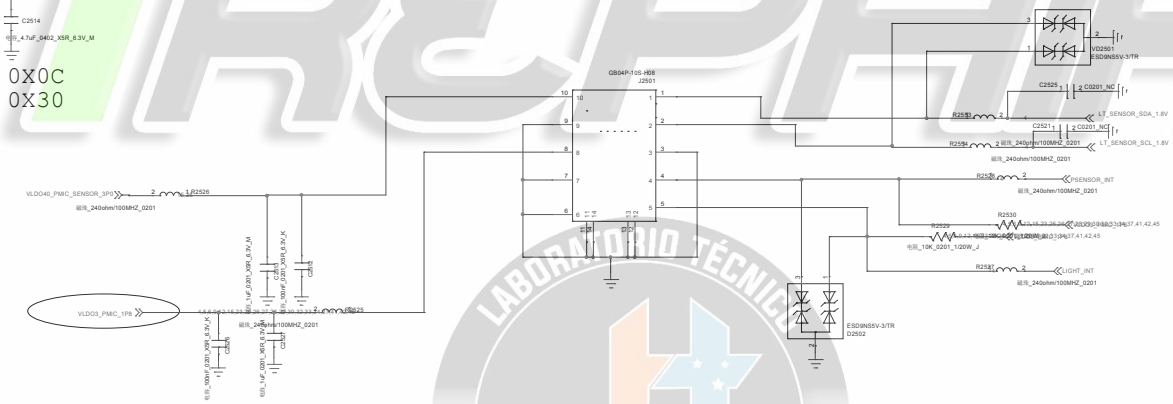

VLDO40_PMIC_SENSOR_3P0 need Software change to 3.0V

Title	<Title>		
Size D	Document Number <Doc>		Rev <RevCode>
Date: Friday, January 25, 2019	Sheet 25 of 44		

LCD MIPI Common Mode Filter

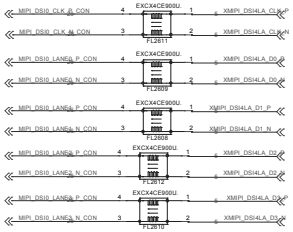

LCD/TP-Connector

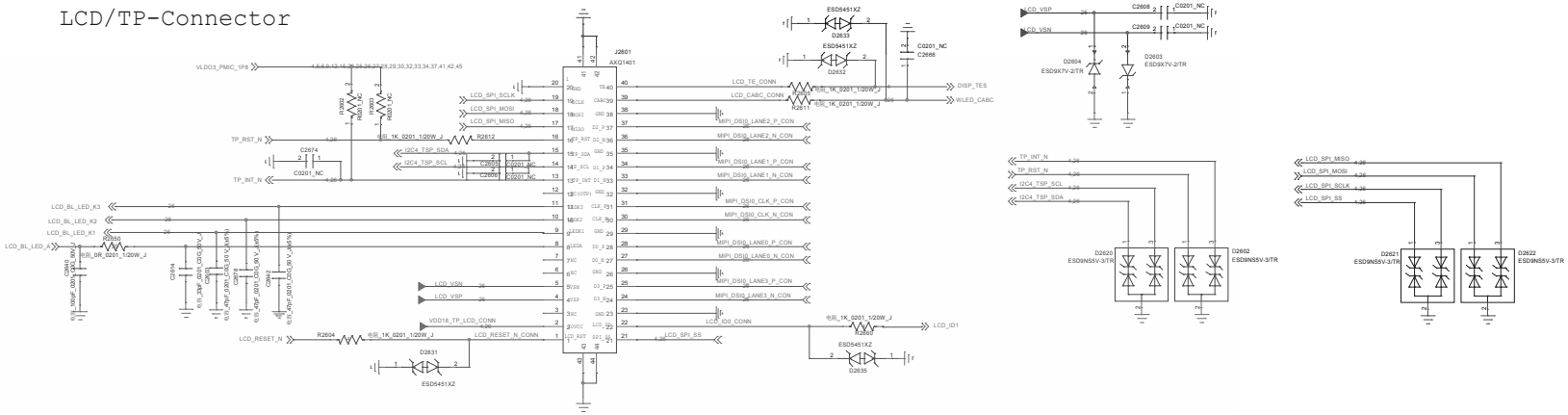

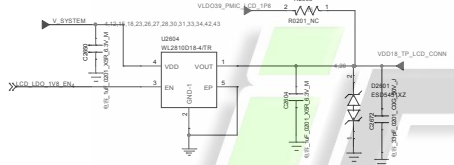

LDO should be WL2810D18-4/TR

	IOVDD	
LCD	1.8V	EXT LDO6/LDO39
FPS	1.8V	EXT LDO7/LDO37

LCD BL driver

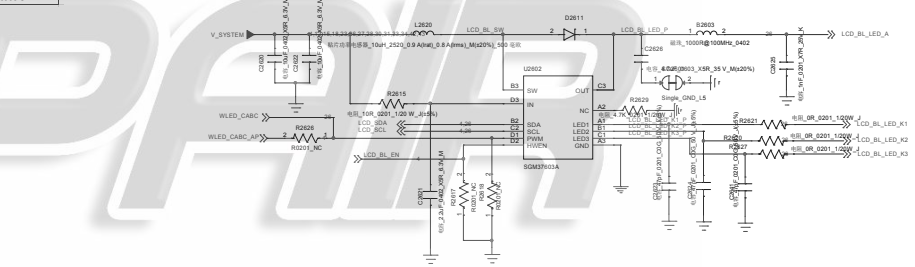

FPS-Connector

J2603 HQ11910378000

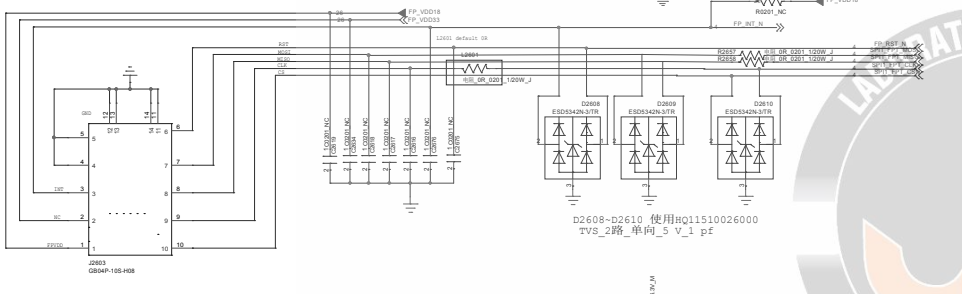

D2608~D2610 使用HQ11510026000
TVS_2路_单向_5 V_1 pf

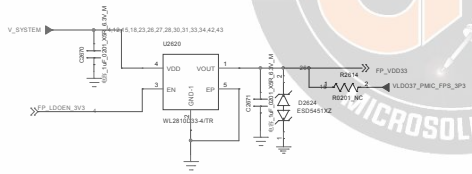

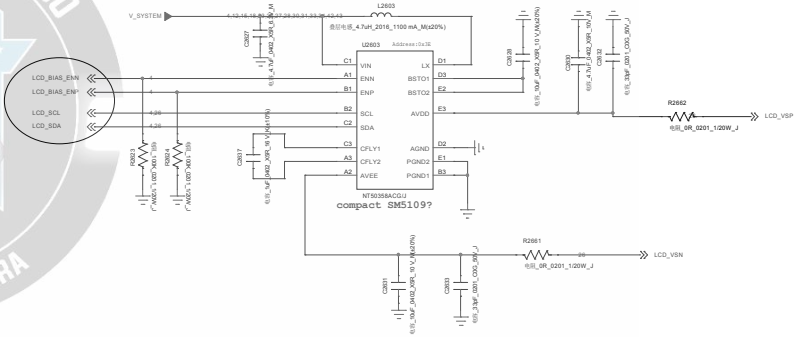

Title	<Title>		
Size D	Document Number <Doc>		Rev <RevCode>
Date: Friday, January 25, 2019	Sheet 26 of 44		

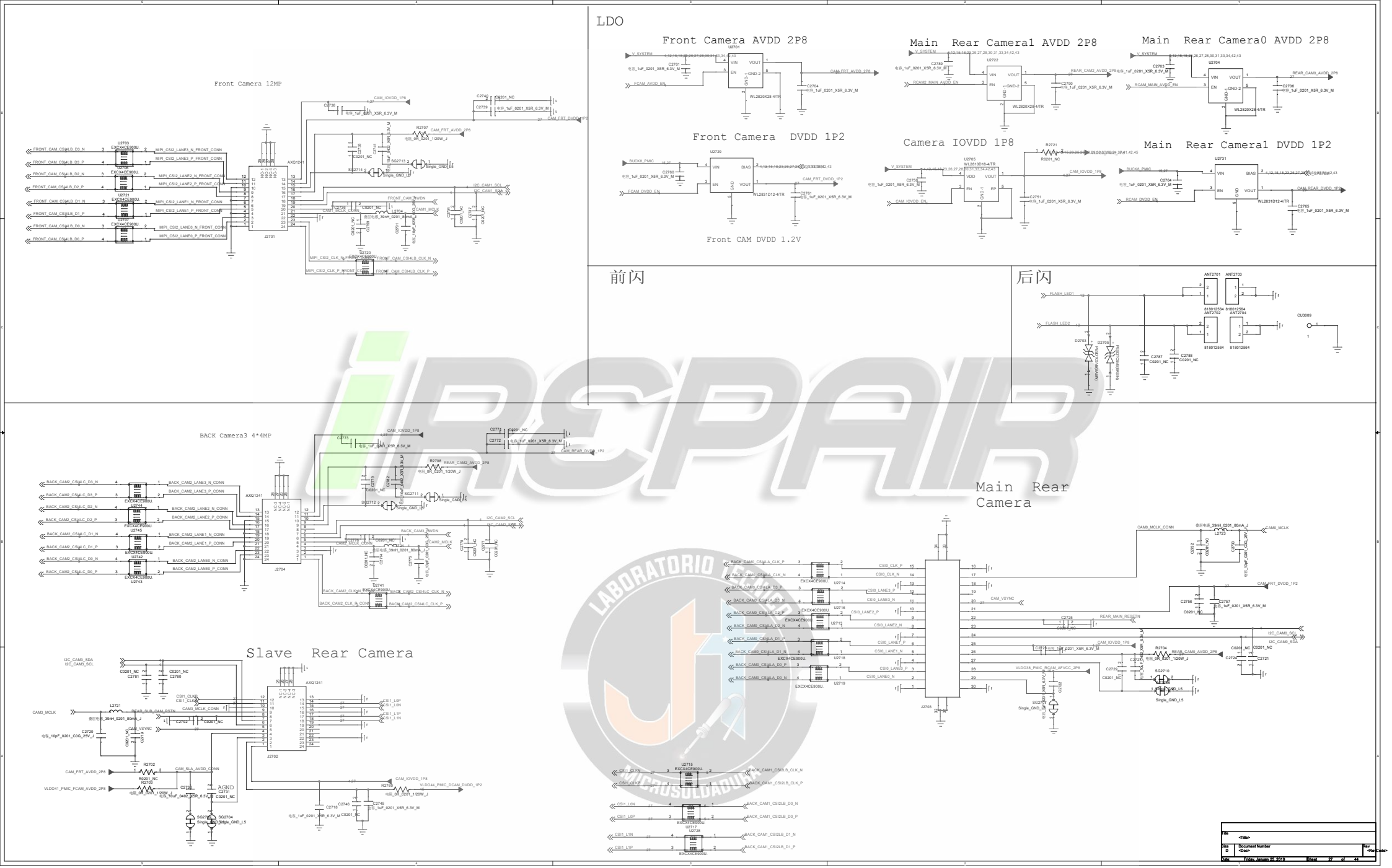

iRCPAIR
LABORATORIO ESPECIALIZADO EN MICROSOLDADURA

音量键&开关机键

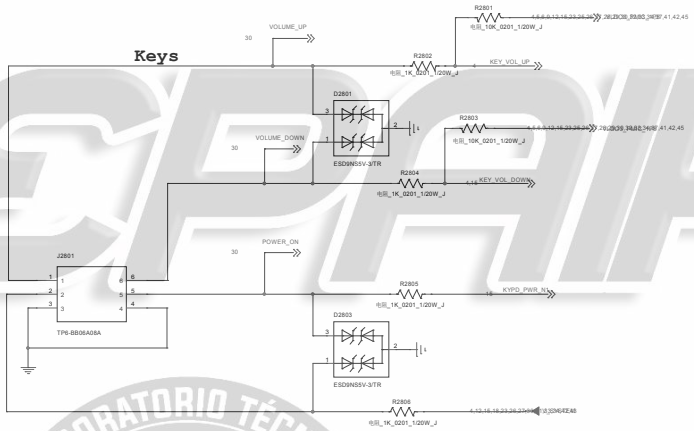

iREPAIR
LABORATORIO TÉCNICO
MICROSOLDADURA

Title	<Title>	
Size D	Document Number <Doc>	Rev <RevCode>
Date: Friday, January 25, 2019	Sheet 28 of 44	

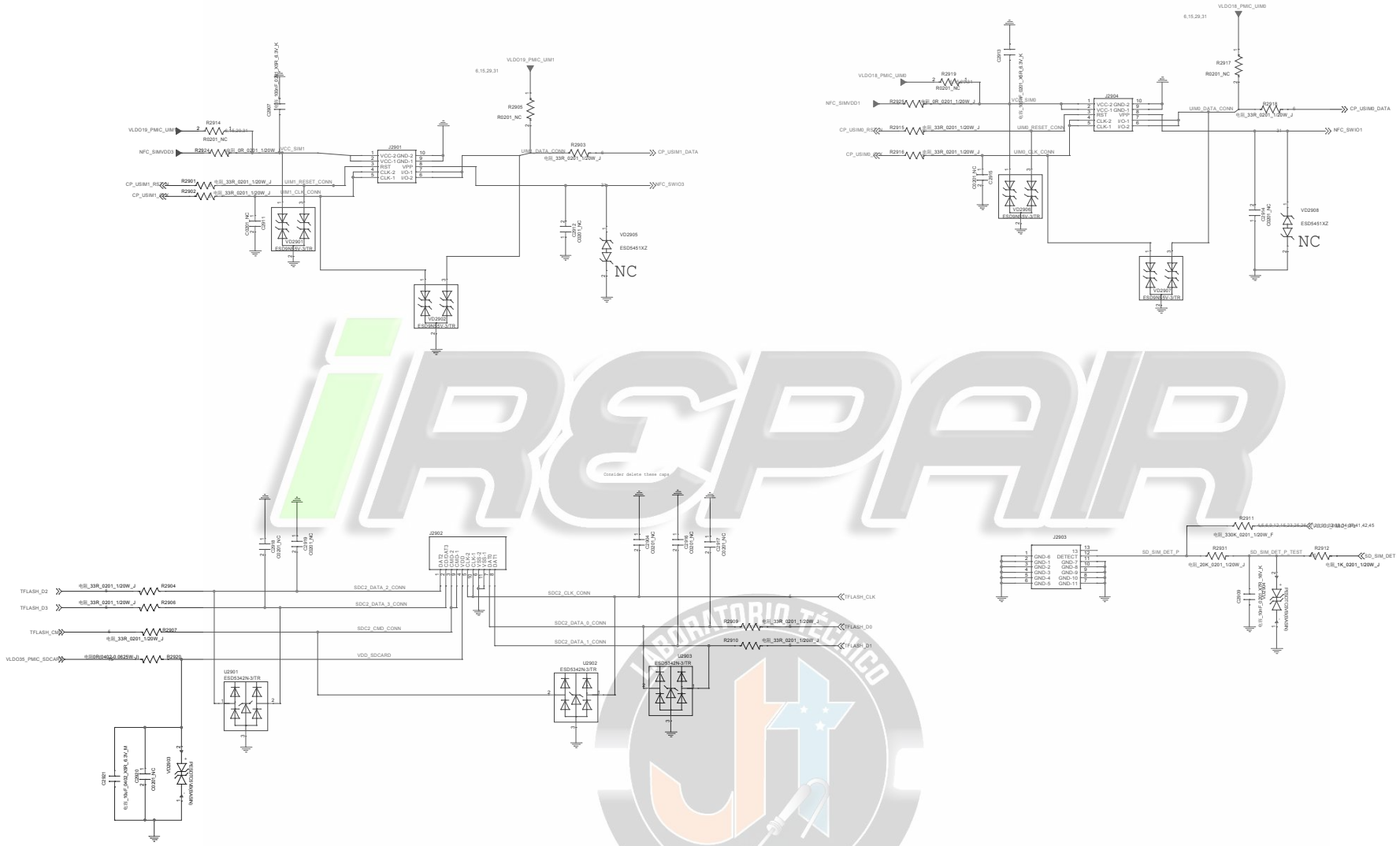

Title	<Title>		
Size D	Document Number <Doc>		Rev <RevCode>
Date: Friday, January 25, 2019	Sheet 29 of 44		

JTAG CONNECTOR
Lenovo SW debug request regarding moto

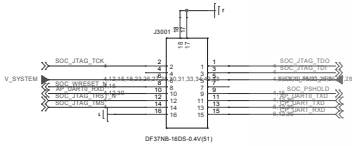

NO WATCH DOG

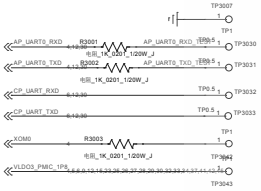

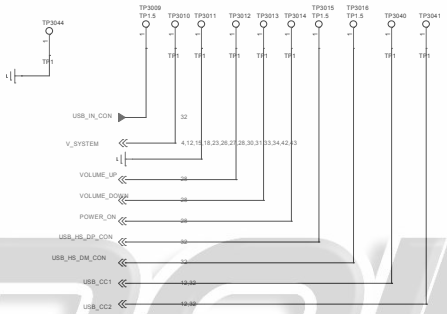

PCBA AUTOMATIC TEST point

接地弹片 TOP

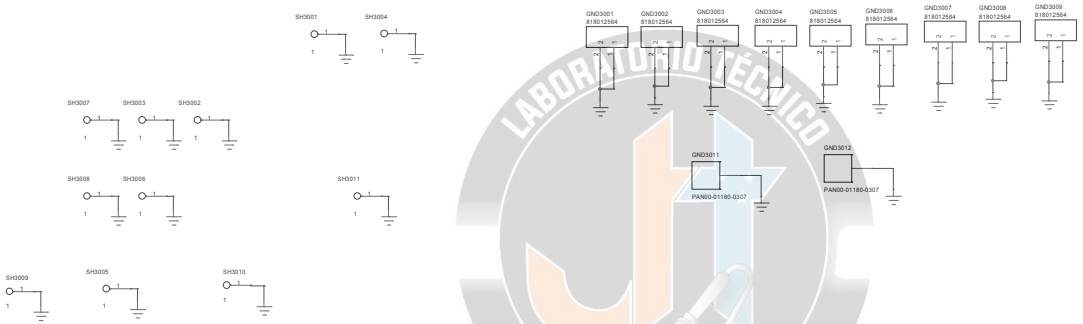

iREPAIR
LABORATORIO TÉCNICO
MICROSOLDADURA

Title	<Title>		
Size D	Document Number <Doc>		Rev <RevCode>
Date: Friday, January 25, 2019	Sheet 30 of 44		

NFC

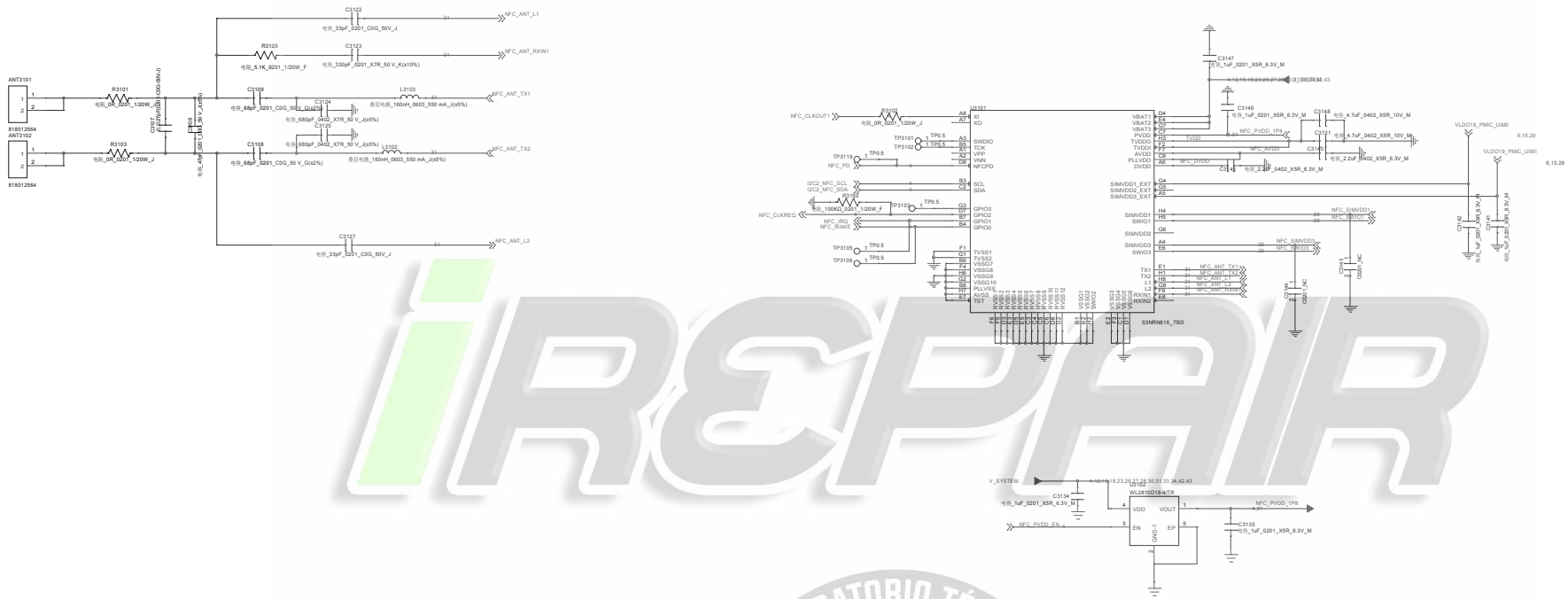

U3102: BOM中用1.8V的LDO

Title	<Title>		
Size D	Document Number <Doc>		Rev <RevCode>
Date: Friday, January 25, 2019	Sheet 31 of 44		

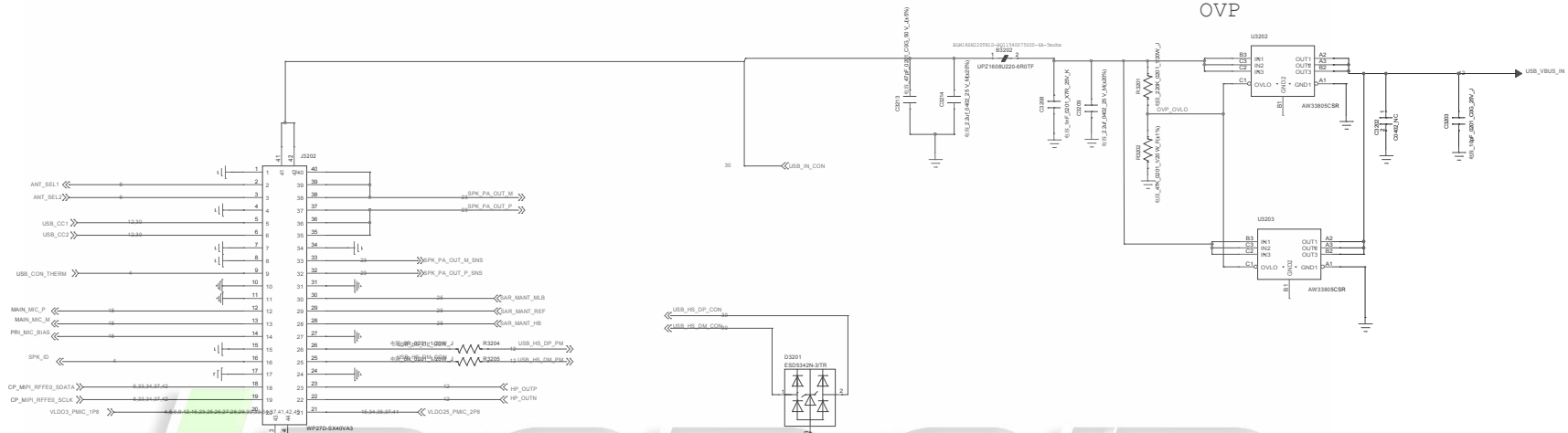

Battery Connector

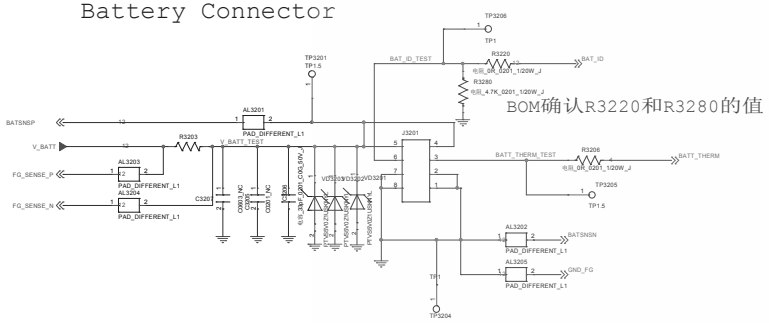

iREPAIR
LABORATORIO TÉCNICO
MICROSOLDADURA

Title	<Title>	
Size D	Document Number <Doc>	Rev <RevCode>
Date: Friday, January 25, 2019	Sheet 32 of 44	

PRIMARY_ANTENNA

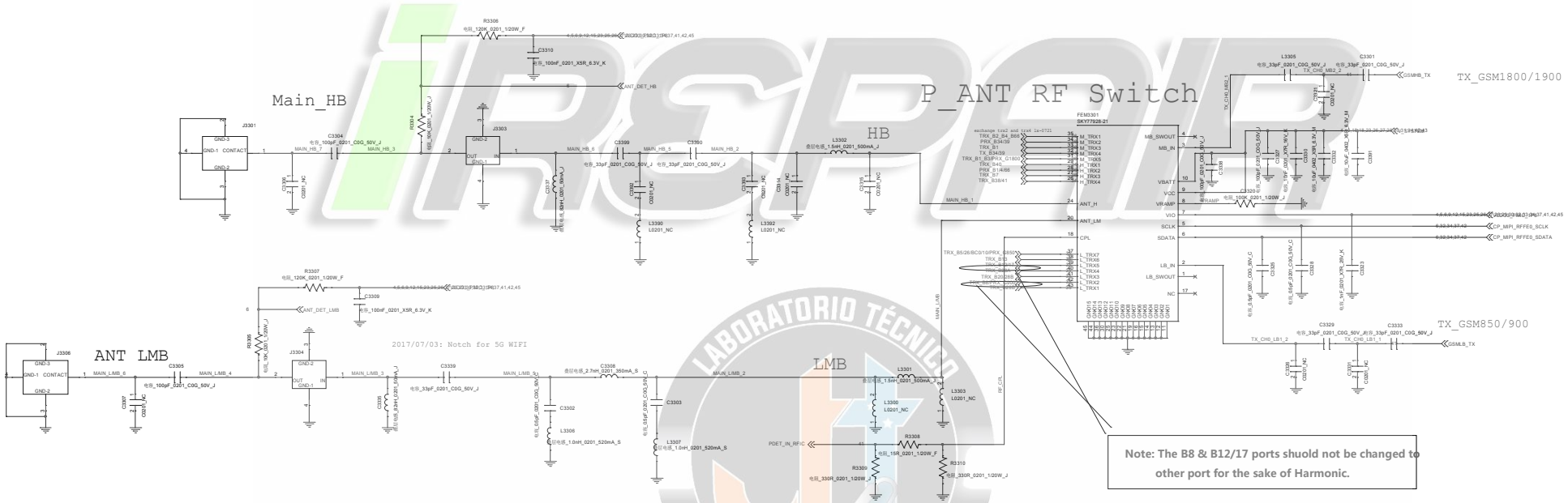

Note: The B8 & B12/17 ports shuold not be changed to other port for the sake of Harmonic.

Company: Huaqin	
Block Title	PRIMARY_ANTENNA
Project	Telfer
Rev	1.0
Date: Friday, January 25, 2019	Sheet 33 of 32

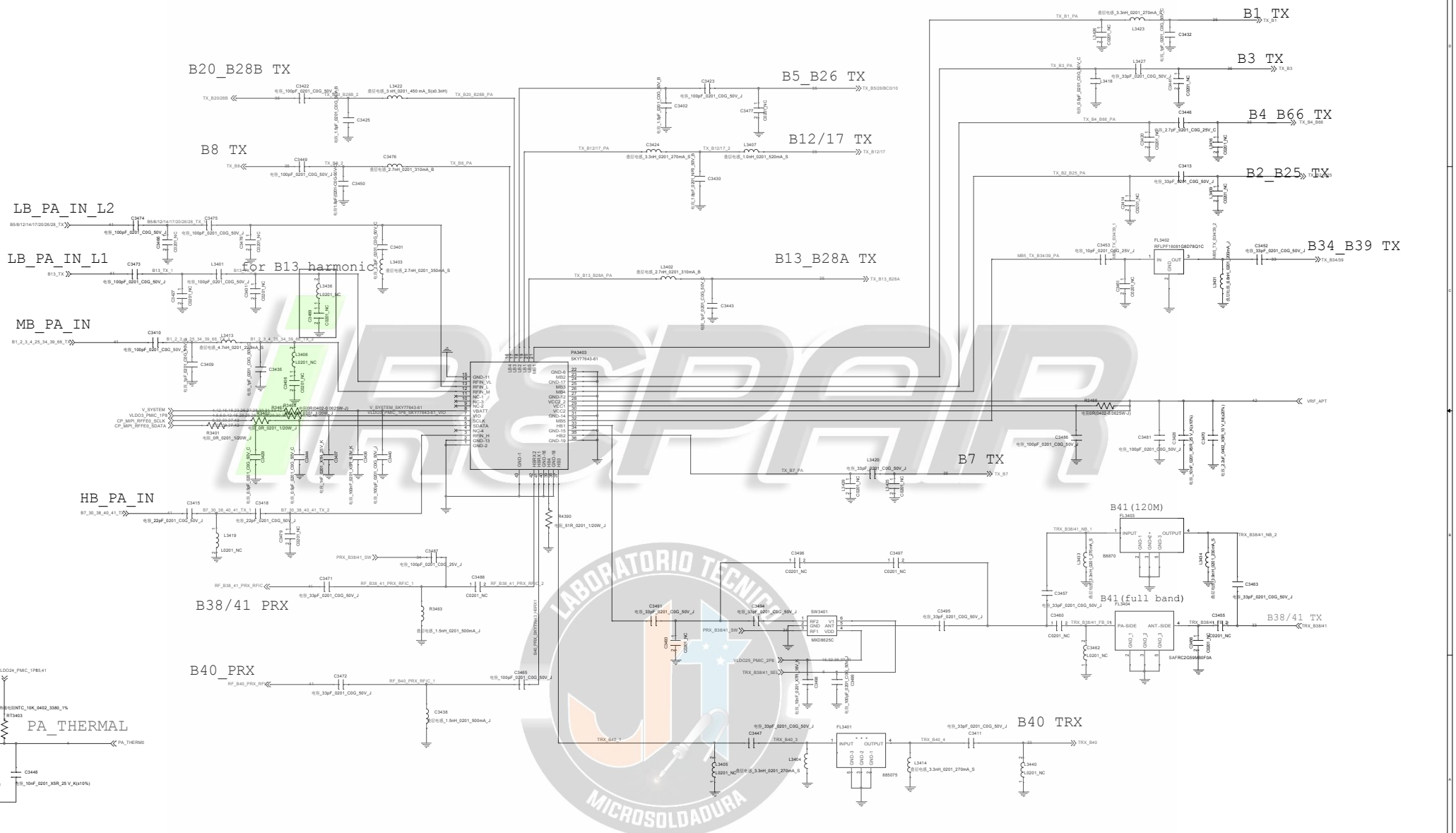

LABORATORIO TÉCNICO MICROSOLDADURA

Company: Huaqin			
Block Title	PA & PA THERMAL		
Project	Telfer	Rev	1.0
Date:	Friday, January 25, 2019	Sheet	34 of 33

TRX_LB

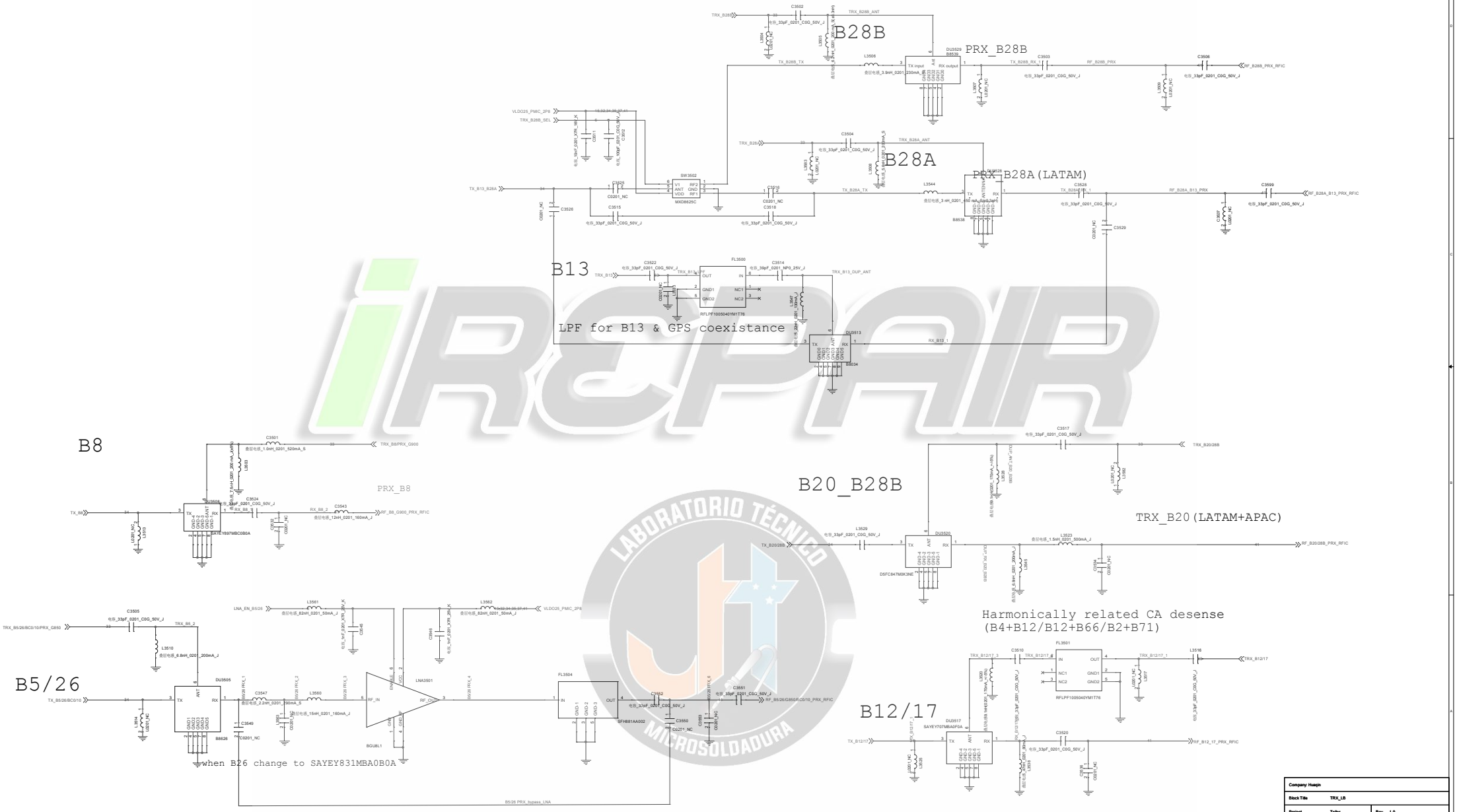

iREPAIR
LABORATORIO TÉCNICO
MICROSOLDADURA

Company: Huaqin			
Block Title	TRX_LB		
Project	Telfer	Rev	1.0
Date:	Friday, January 25, 2019	Sheet	35 of 34

TRX_MHB

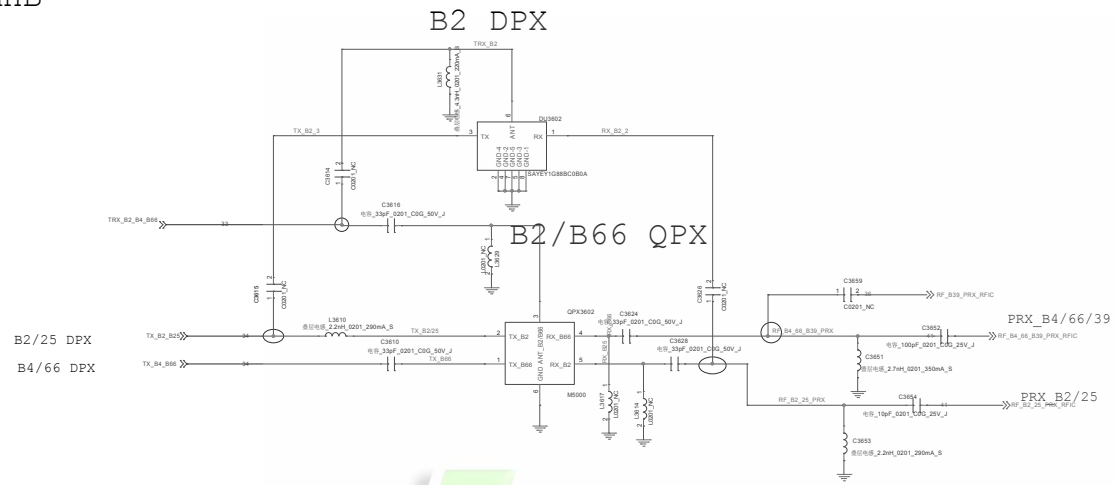

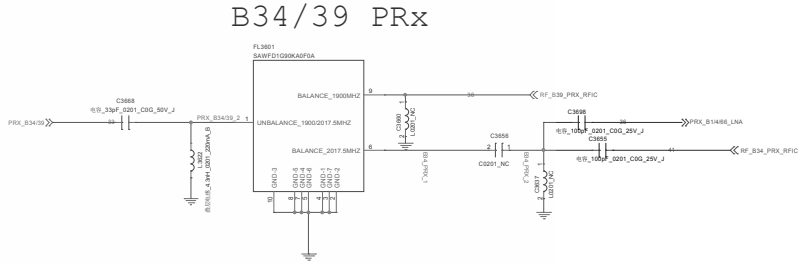

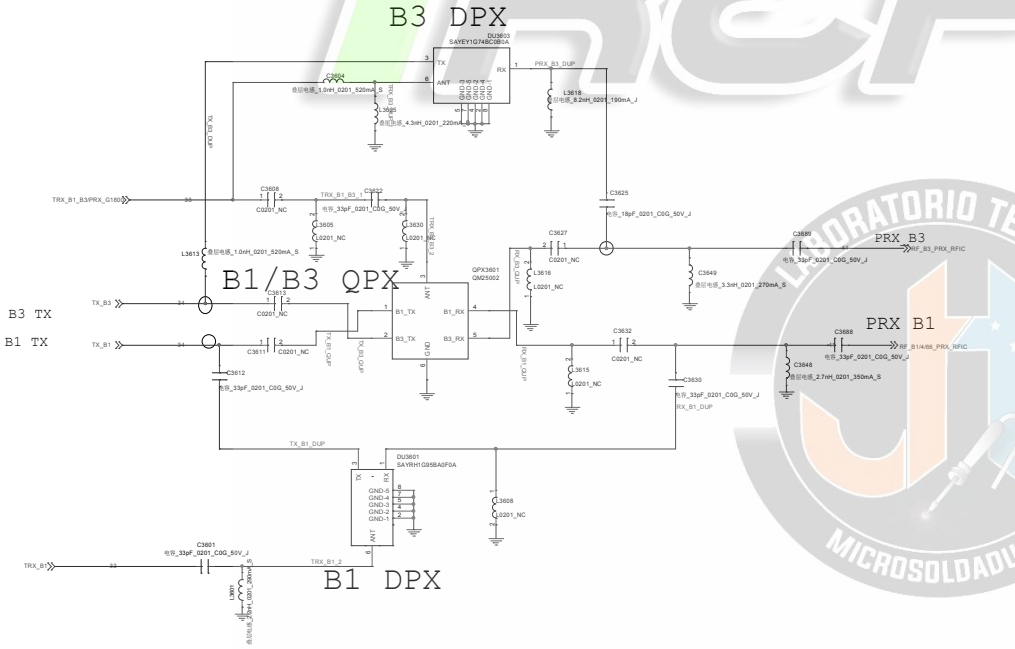

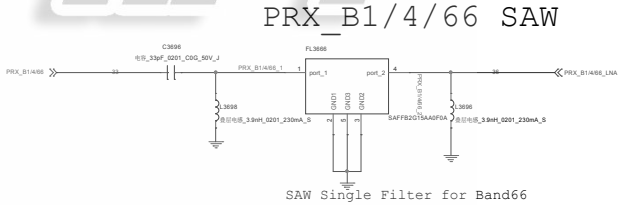

SAW Single Filter for Band66

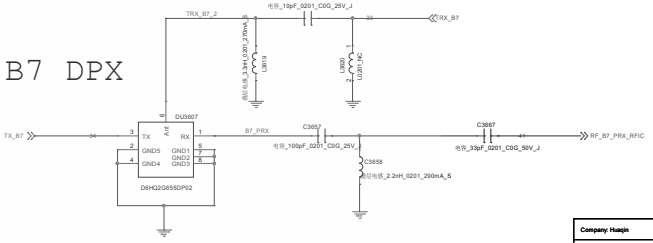

Company: Huaqin			
Block Title	TRX_MHB		
Project	Teller	Rev	1.0
Date:	Friday, January 25, 2019	Sheet 36 of 35	

DIVERSIT_ANT

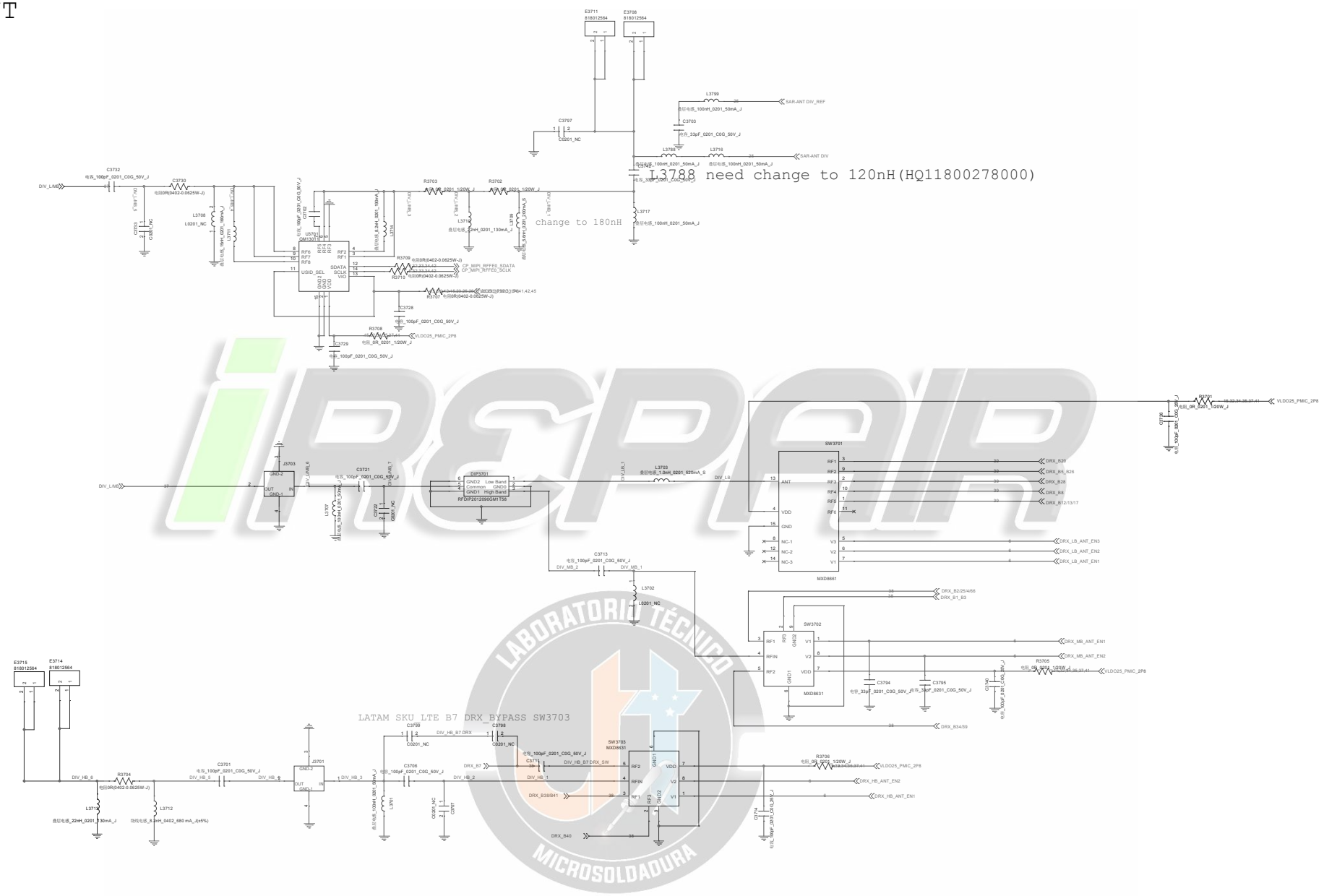

Company: Huaqin			
Block Title	DIVERSIT_ANT		
Project	Telfer	Rev	1.0
Date:	Friday, January 25, 2019	Sheet 37 of 38	

DRX_MB_HB

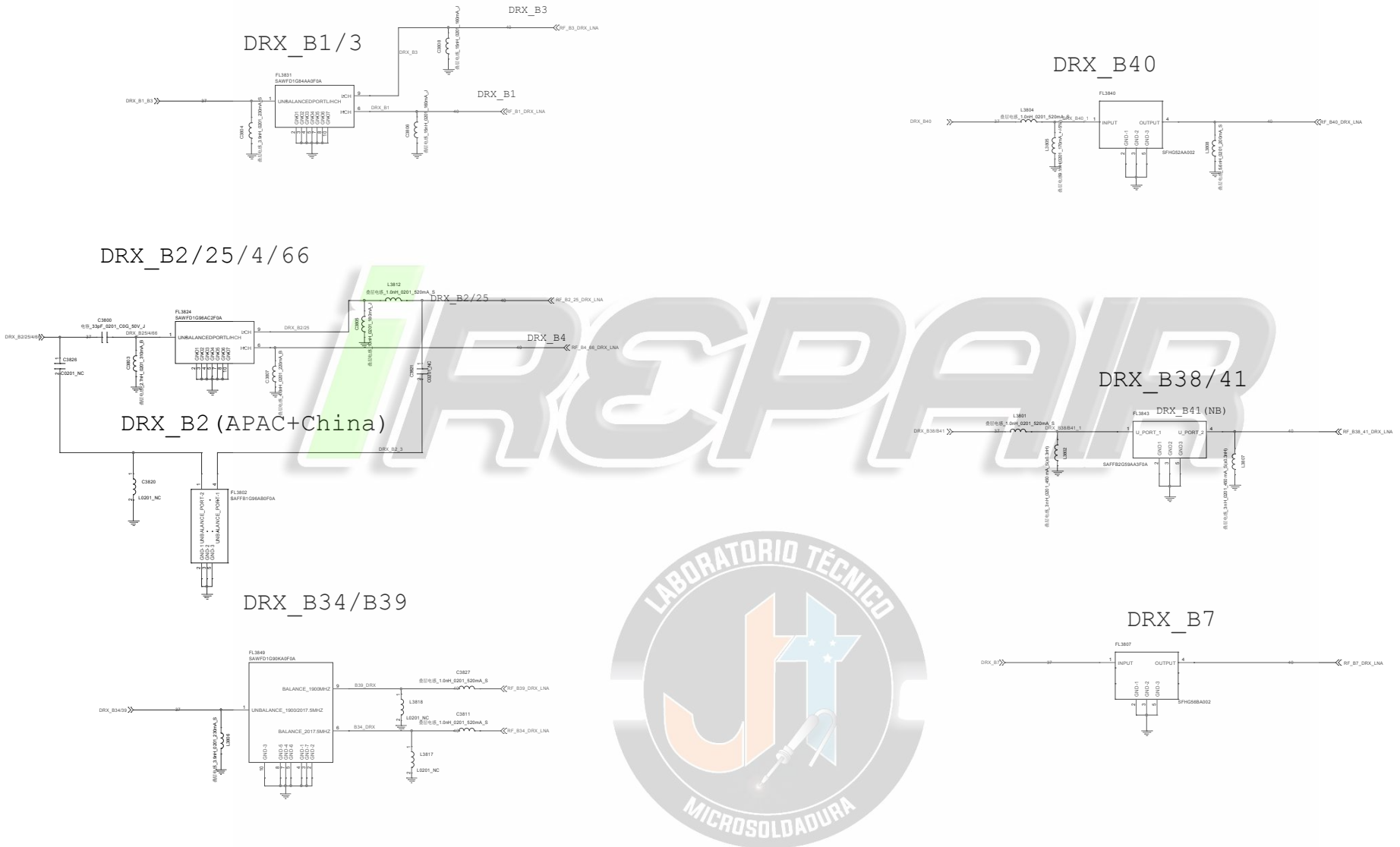

Company: Huaqin	
Block Title	DRX_MB_HB
Project	Telfer
Rev	1.0
Date:	Friday, January 25, 2019
Sheet	38 of 37

DRX_LB

DRX_B12/13/17

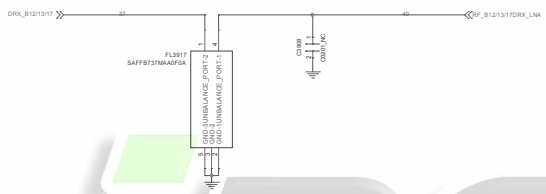

DRX_B8

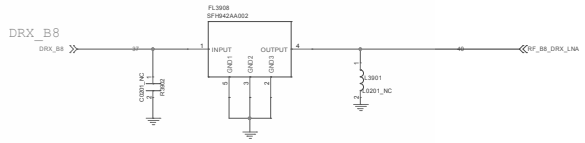

DRX_B28

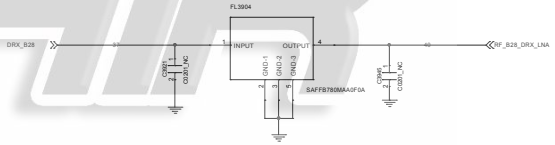

DRX_B5/26

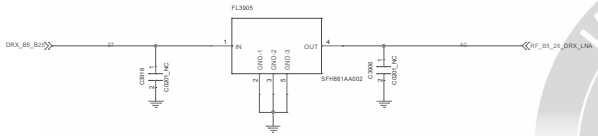

DRX_B20

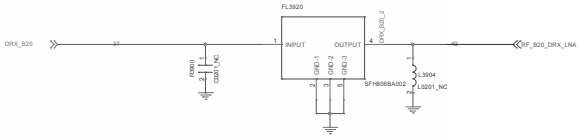

iREPAIR
LABORATORIO TÉCNICO
MICROSOLDADURA

Company: Huaqin			
Block Title	DRX_LB		
Project	Telfer	Rev	1.0
Date:	Friday, January 25, 2019	Sheet	39 of 38

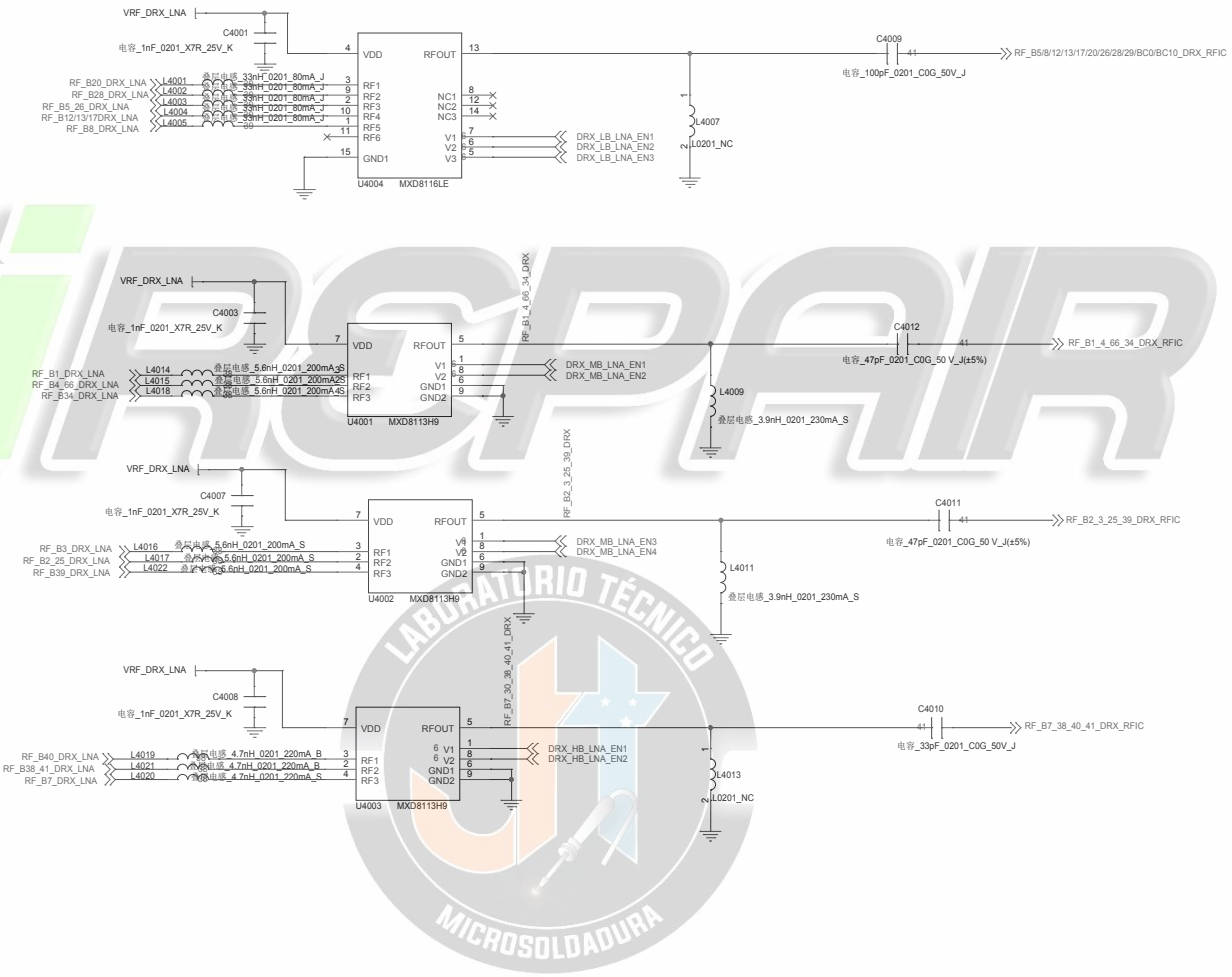

iRGPAIR
LABORATORIO TÉCNICO
MICROSOLDADURA

Company: Huaqin			
Block Title	DRX_LNA		
Project	Teller	Rev	1.0
Date:	Friday, January 25, 2019	Sheet	40 of 39

RFIC-S925

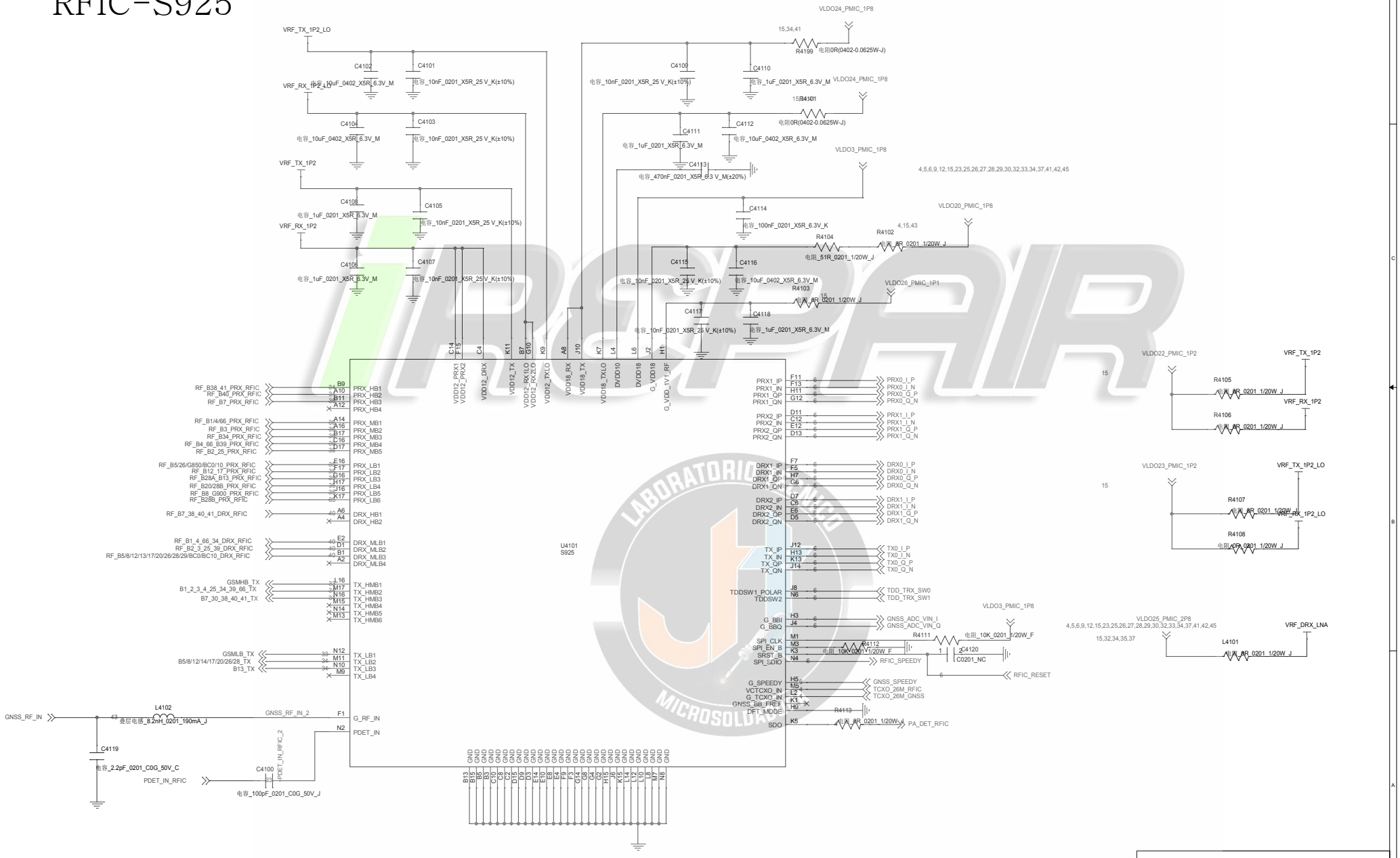

Title		
	<Title>	
Size C	Document Number <Doc>	Rev <RevCode>
Date: Friday, January 25, 2019	Sheet 41 of 40	

S2ABA01X01-6030 APT

APT
DC/DC

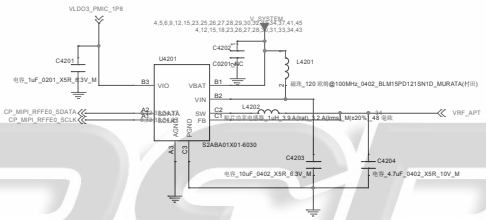

iREPAIR
LABORATORIO TÉCNICO
MICROSOLDADURA

Company: Huaqin			
Block Title	QET4101		
Project	Teller	Rev	1.0
Date:	Friday, January 25, 2019	Sheet 42 of 41	

WIFI_2.4G_5G & BT & GPS

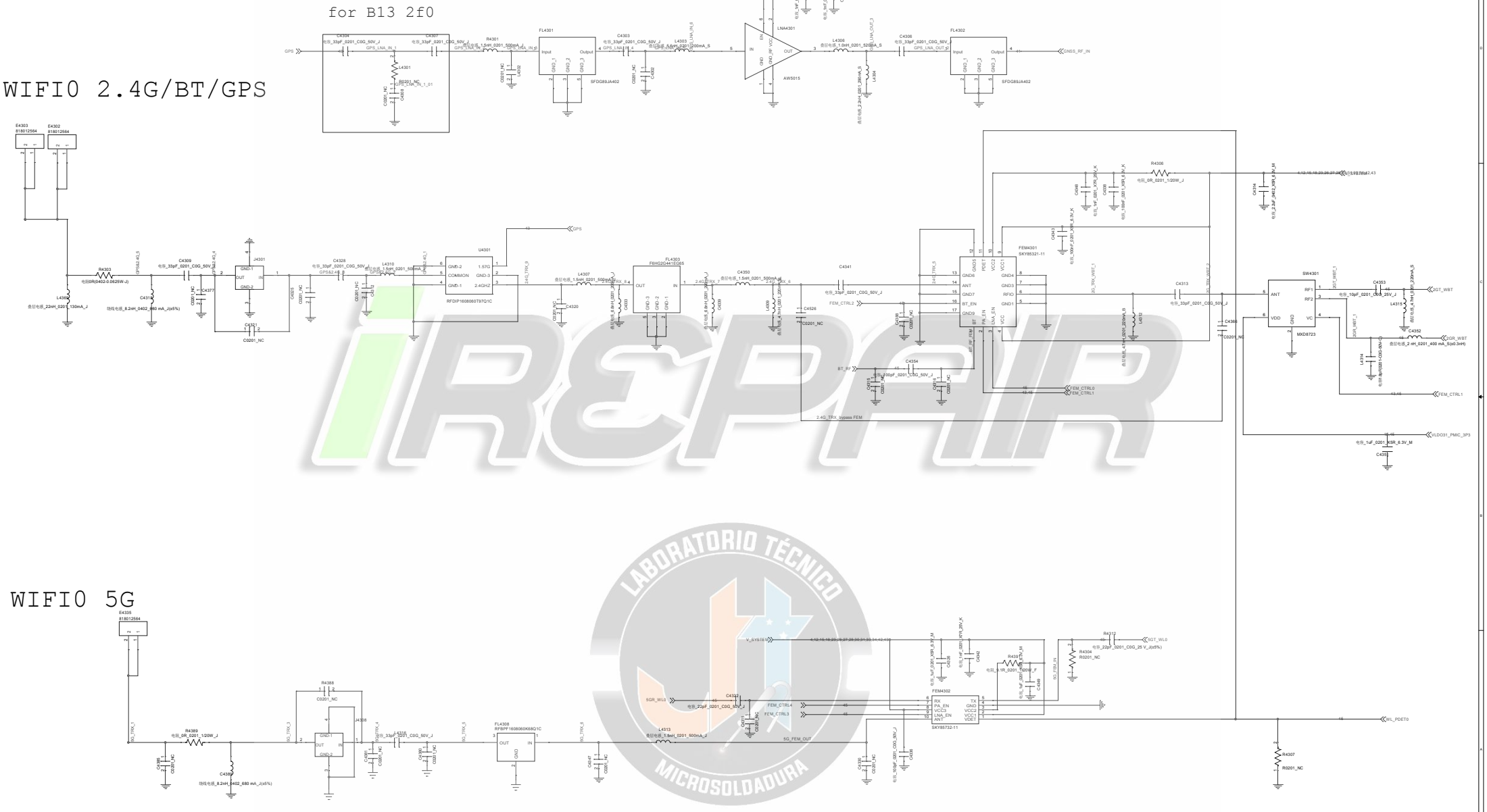

iREPAIR
LABORATORIO TÉCNICO MICROSOLDADURA

Company: Huaqin			
Block Title	GPS		
Project	Telfer	Rev	1.0
Date: Friday, January 25, 2019		Sheet 43 of 42	

iREPAIR
LABORATORIO TÉCNICO
MICROSOLDADURA

Company: Huaqin			
Block Title	WIFI 2.4G/5G/BT		
Project	Teller	Rev	1.0
Date:	Friday, January 25, 2019	Sheet	44 of 43

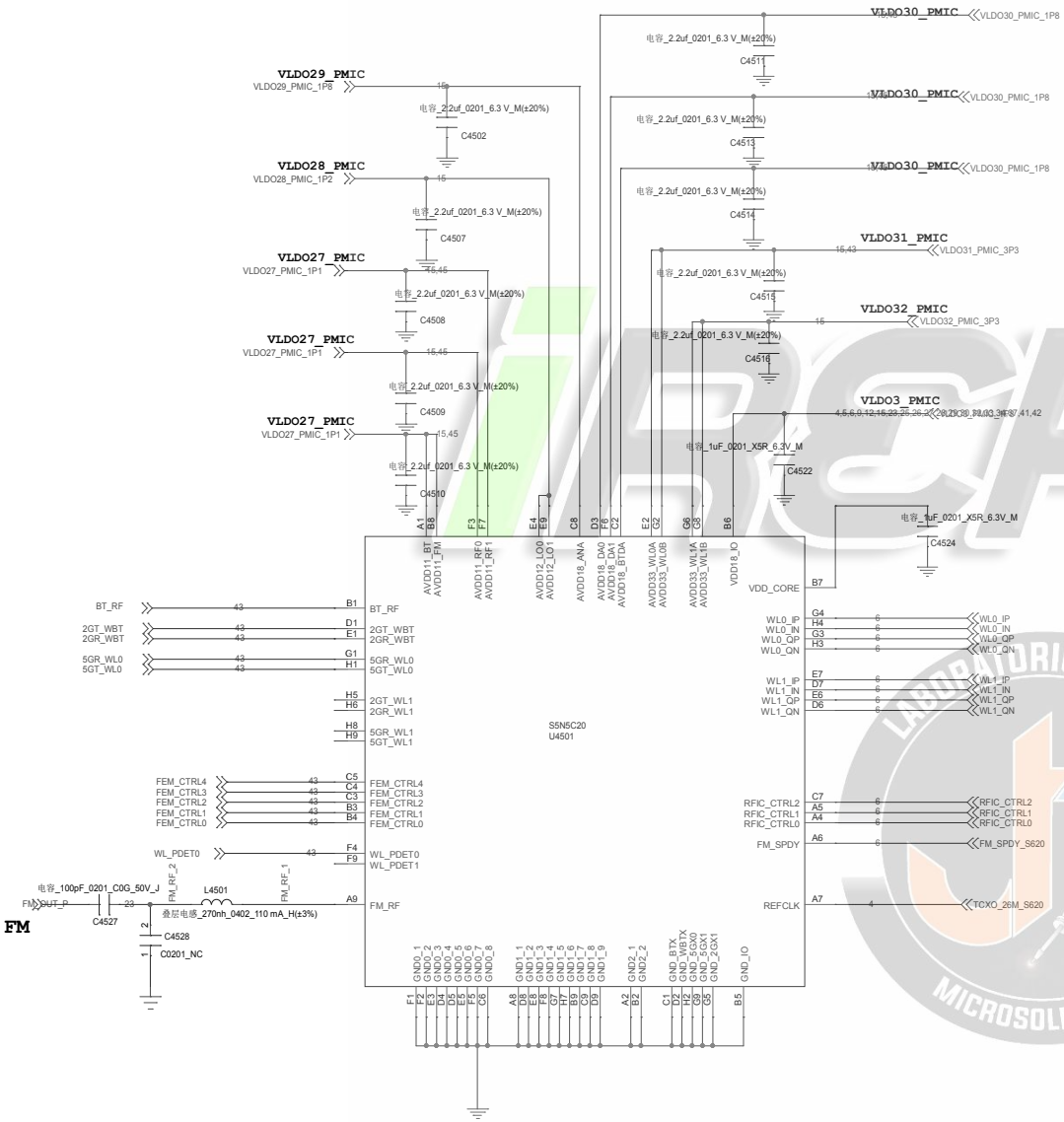

Title		
	<Title>	
Size C	Document Number <Doc>	Rev <RevCode>
Date: Friday, January 25, 2019	Sheet 45 of 44	